# FM HANDFREE 耳機端(108MHz)

(更新日期2001/1/2)

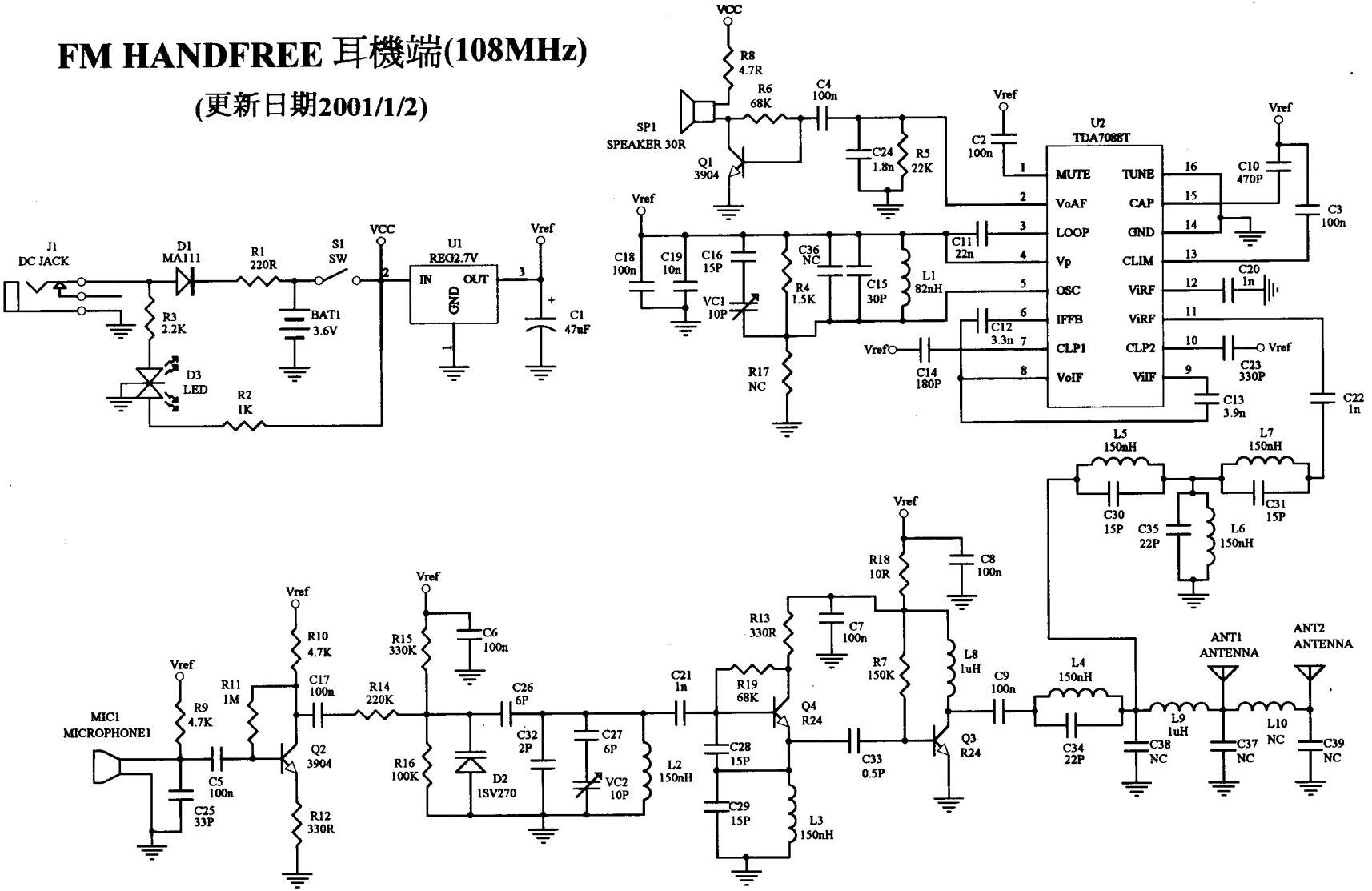


| | | |
|---|---|---|
| Title: FM HANDFREE 耳機端 | | |
| Size: A4 | Number: | Revision: V1.0 |
| Date: 2-Feb-2001 | | Sheet of |
| File: D:\vensenDATA\..\FM-EAR3.sch | | Drawn By: VENSEN |