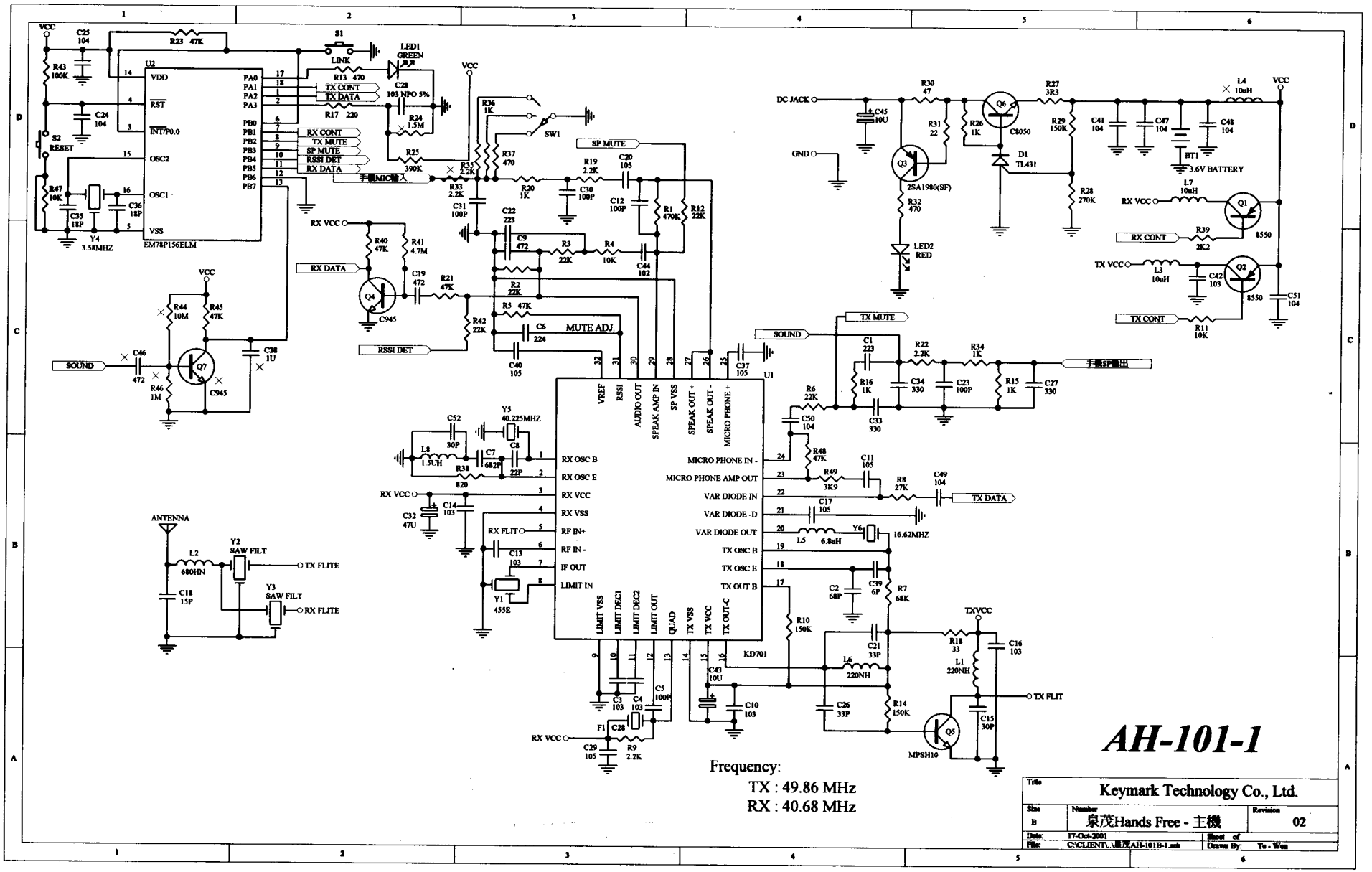
AH-101-1
Frequency:
TX : 49.86 MHz
RX : 40.68 MHz
Keymark Technology Co., Ltd.
泉茂Hands Free - 主機
02
17-Oct-2001
C:\CLIENT\..\泉茂AH-101B-1.sch
Tu - Wen
EM78P156ELM
KD701
U2
U1
VDD
RST
INT/P0.0
OSC2
OSC1
VSS
PA0
PA1
PA2
PA3
PB0
PB1
PB2
PB3
PB4
PB5
PB6
PB7
RX CONT
TX CONT
TX DATA
TX MUTE
SP MUTE
RSSI DET
RX DATA
手機MIC輸入
手機SP輸出
SOUND
MUTE ADJ.
LINK
LED1 GREEN
LED2 RED
RESET
DC JACK
GND
VCC
RX VCC
TX VCC
TXVCC
TX FLIT
RX FLIT
TX FLITE
RX FLITE
ANTENNA
Y4 3.58MHZ
Y5 40.225MHZ
Y6 16.62MHZ
Y1 455E
Y2 SAW FILT
Y3 SAW FILT
BT1 3.6V BATTERY
D1 TL431
Q3 2SA1980(SF)
Q6 C8050
Q1 8550
Q2 8550
Q4 C945
Q7 C945
Q5 MPSH10
VREF
RSSI
AUDIO OUT
SPEAK AMP IN
SP VSS
SPEAK OUT +
SPEAK OUT -
MICRO PHONE +
RX OSC B
RX OSC E
RX VCC
RX VSS
RF IN+
RF IN -
IF OUT
LIMIT IN
MICRO PHONE IN -
MICRO PHONE AMP OUT
VAR DIODE IN
VAR DIODE -D
VAR DIODE OUT
TX OSC B
TX OSC E
TX OUT B
LIMIT VSS
LIMIT DEC1
LIMIT DEC2
LIMIT OUT
QUAD
TX VSS
TX VCC
TX OUT-C