AcroLAN (AWL-1100C) PCMCIA Card Block Diagram

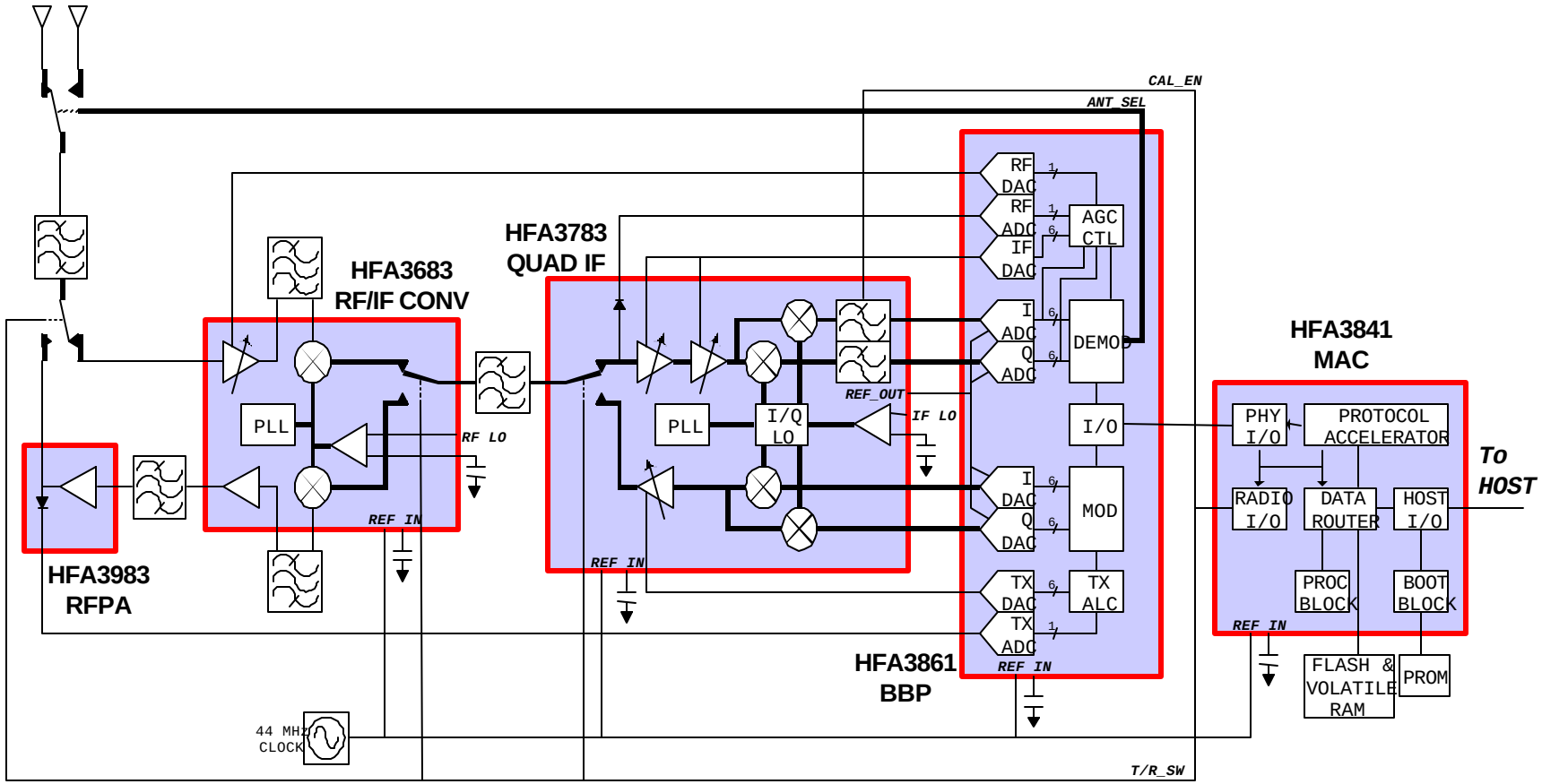

ACROWAVE SYSTEMS CO., LTD.

FCC ID: PE6AWL-1100C

JOB #: 689K0

EXHIBIT #:4

Copyright© 2000 Acrowave Systems Co., Ltd.