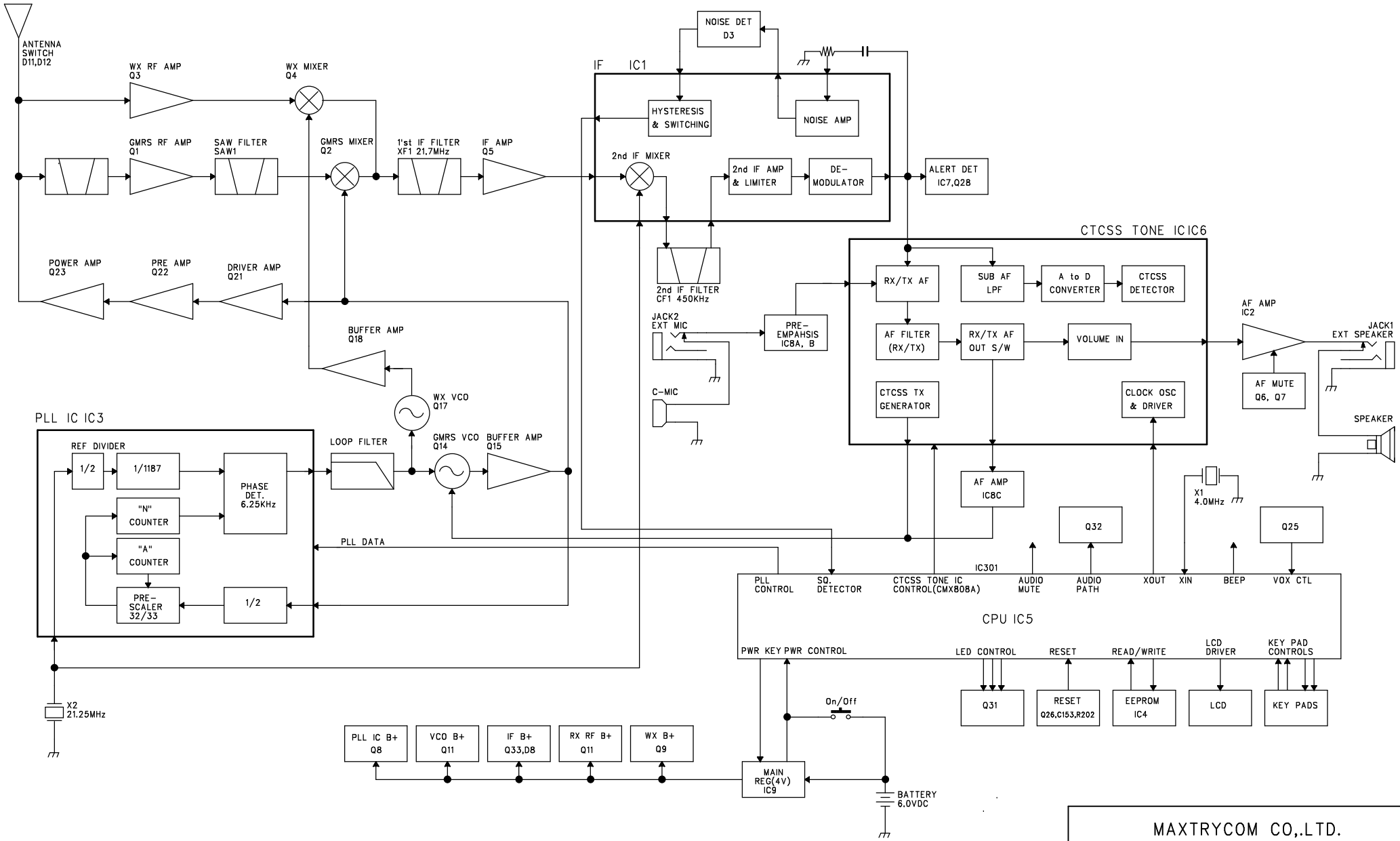

MAXTRYCOM CO,.LTD.

TITLE : GMRS-1535(BLOCK DIAGRAM)

DRAWN	CHECKED	CHECKED	APPROVED	SHEET
				1 OF 1
				REV
				00