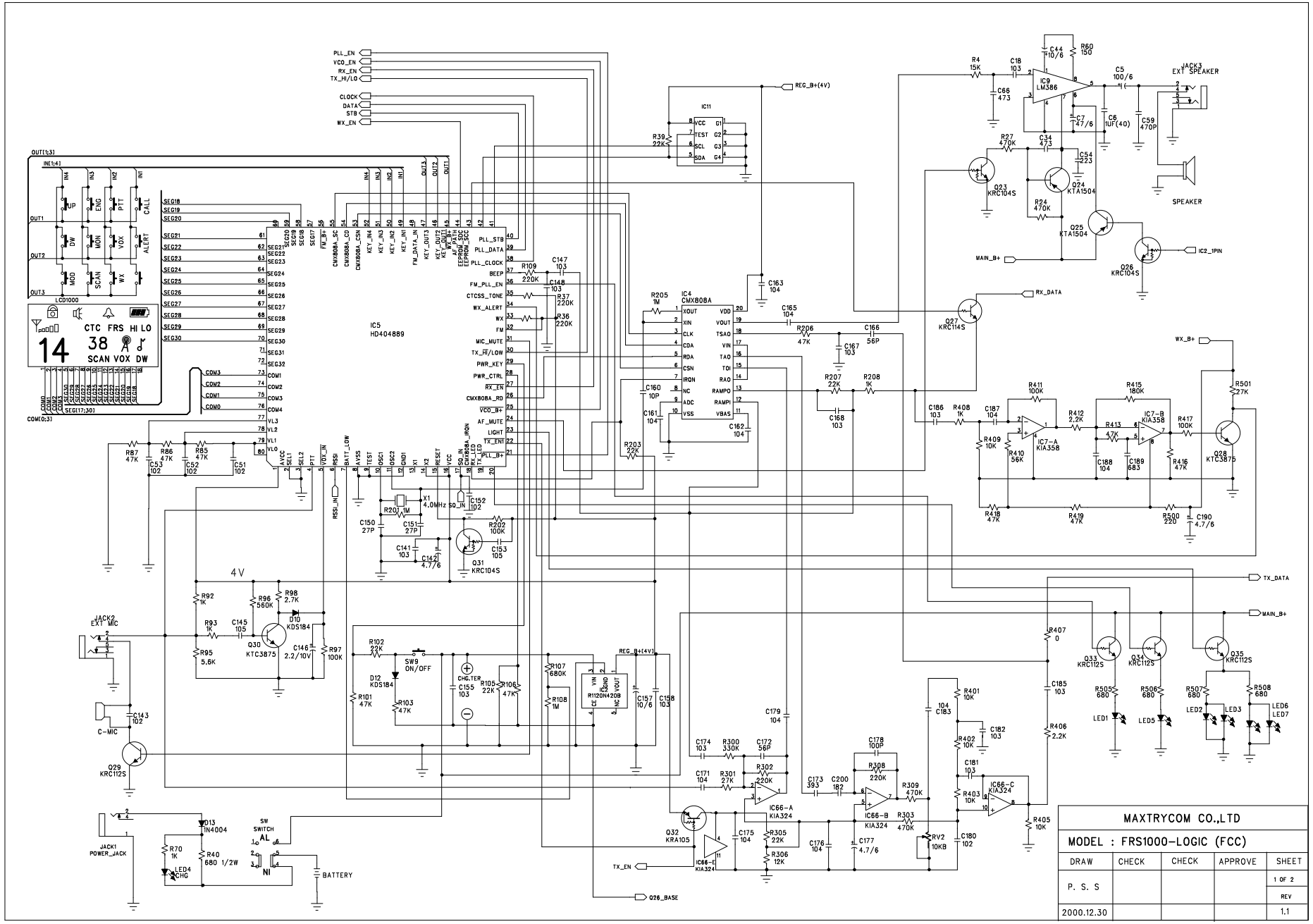
MAXTRYCOM CO.,LTD
MODEL : FRS1000-LOGIC (FCC)
DRAW
CHECK
CHECK
APPROVE
SHEET
P. S. S
1 OF 2
REV
2000.12.30
1.1
IC5
HD404889
IC4
CMX808A
IC11
IC9
LM386
IC7-A
KIA358
IC7-B
KIA358
IC66-A
KIA324
IC66-B
KIA324
IC66-C
KIA324
IC66-E
KIA324
LCD1000
JACK1
POWER_JACK
JACK2
EXT MIC
JACK3
EXT SPEAKER
SPEAKER
BATTERY
SW9
ON/OFF
SW
SWITCH
REG_B+(4V)
MAIN_B+
RX_DATA
TX_DATA
WX_B+
TX_EN
Q26_BASE
IC2_1PIN
PLL_EN
VCO_EN
RX_EN
TX_HI/LO
CLOCK
DATA
STB
WX_EN
4 V