AMEND	DATE		REV NO.	CONTENT	DESIGN	CHECK
		1				
		2				
		3				

USB Transceiver Circuit

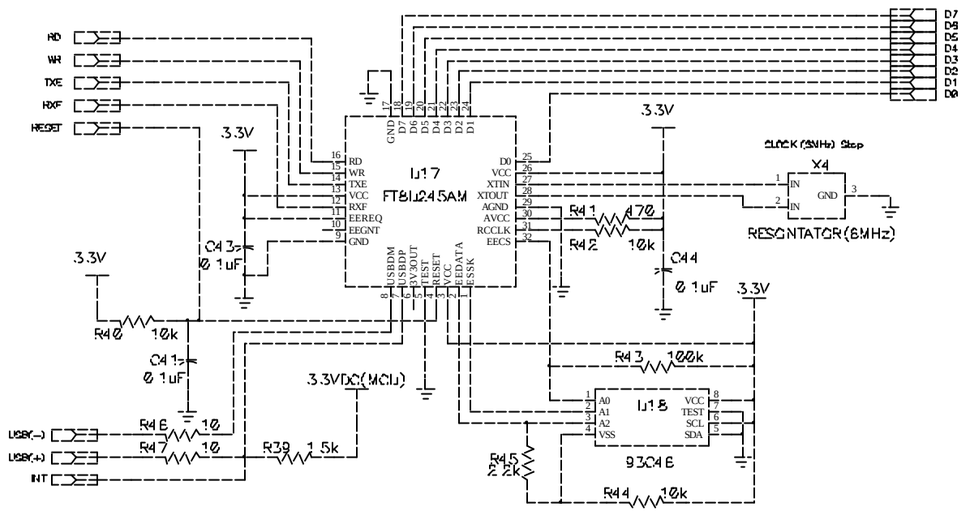

Internal USB Charger

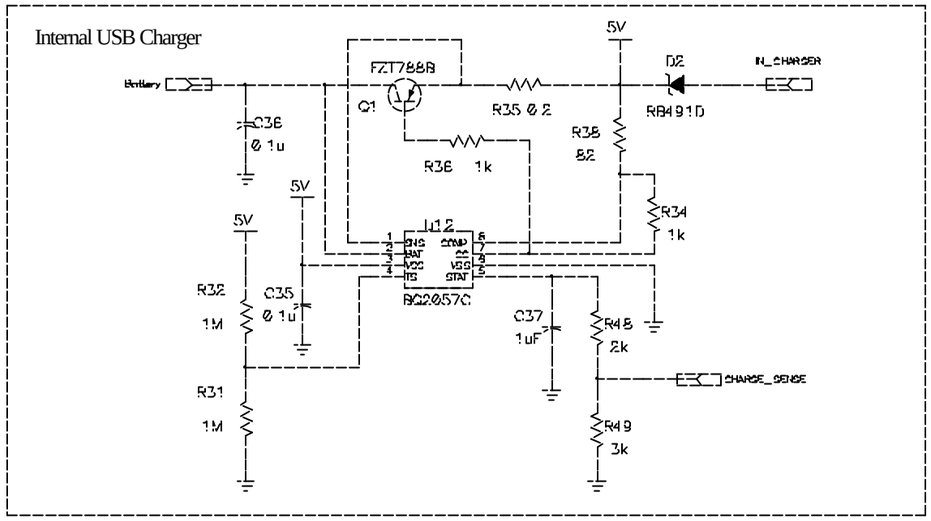

Static LCD Circuit

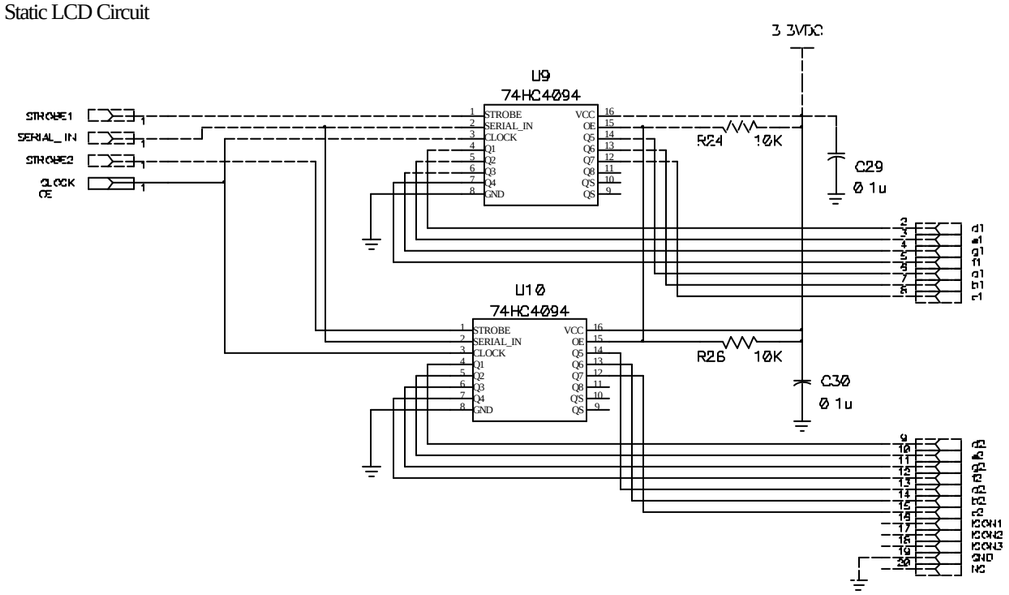

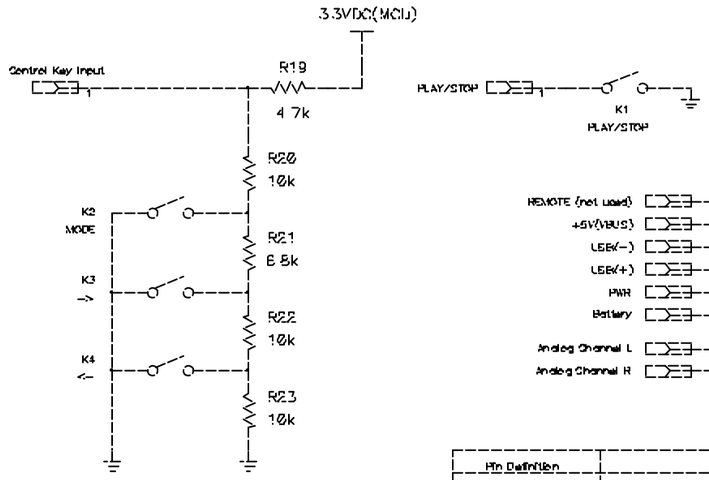

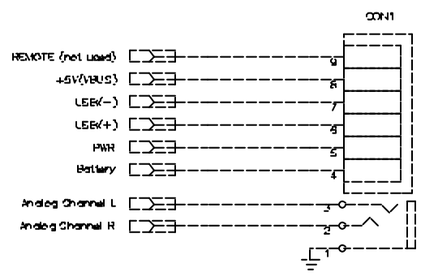

*Remark

Level Table	(Digital & 0xF0)	
0xFF *4/5	C0	Key Off (RemoteON)
0xFF *3/5	90	Mode Select
0xFF *2/5	60	->
0xFF *1/5	30	<-

Pin Definition	Description
Analog Channel L	Analog Sound Output (L Channel)
Analog Channel R	Analog Sound Output (R Channel)
Power	3.7Vdc at battery only supply, 4.2Vdc at battery charging
Pwr	System power supply
+5V(VBUS)	3.6VDC USB Transeiver power supply
USB(+)	USB(+)
USB(-)	USB(-)
Remote	

NO	CODE NO.	MATERIAL	TREATMENT	Q'TY	MODEL	REMARK

DRAWN	DESIGN	CHECK	APPRO	DATE	2002 10 14	NAME	IM-3(64M)
				TOL			
				SCALE		DWG.NO	
				UNIT			

ETRONICS CORP.

AMEND	DATE		REV NO.	CONTENT	DESIGN	CHECK
		1				
		2				
		3				

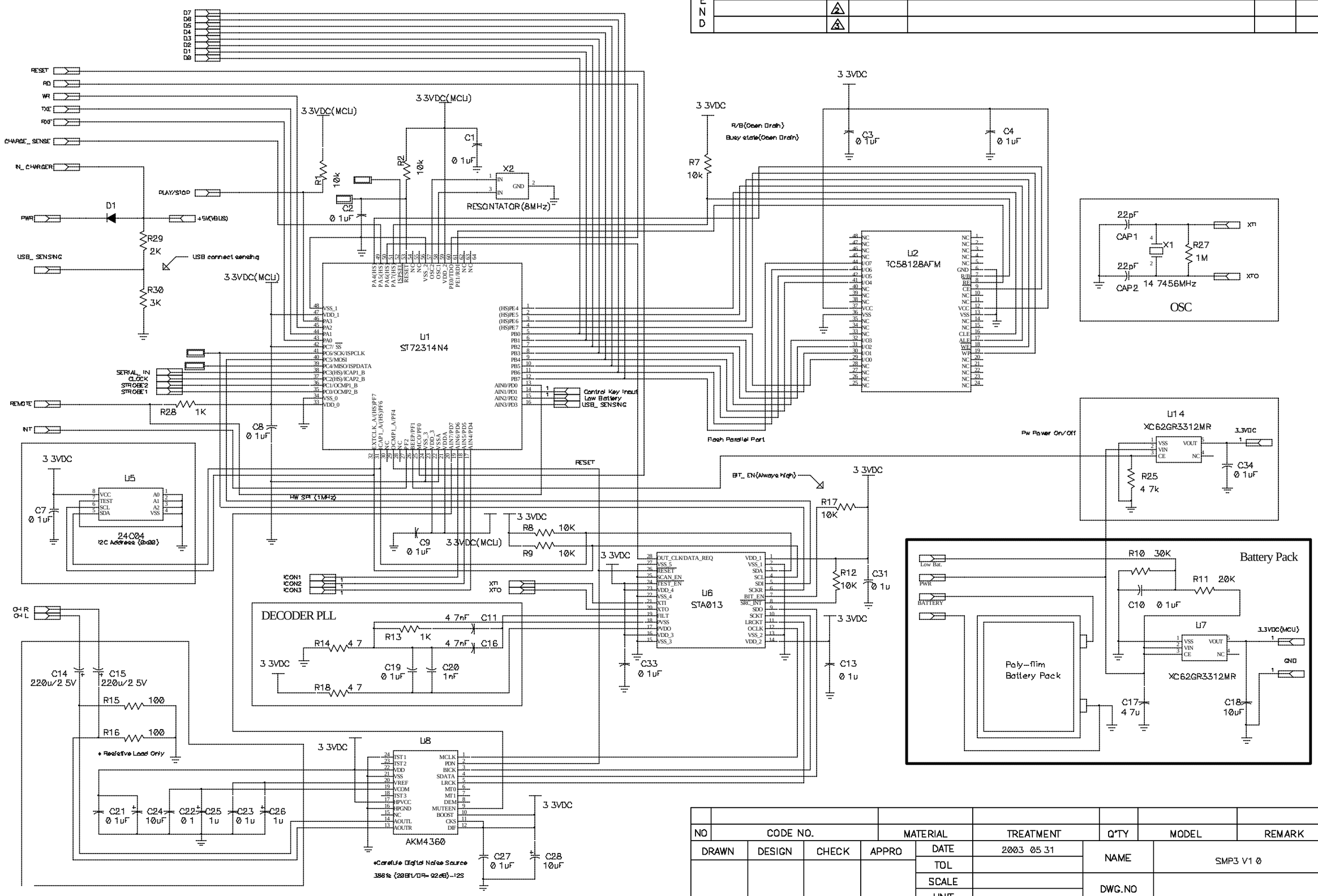

NO	CODE NO.	MATERIAL	TREATMENT	Q'TY	MODEL	REMARK

DRAWN	DESIGN	CHECK	APPRO	DATE	2003 05 31	NAME	SMP3 V1 0
				TOL			
				SCALE		DWG.NO	
				UNIT			

ETRONICS CORP.