REVISIONS			
REV	DESCRIPTION	DATE	APPROVED
C	REVISED PER ECO# E40-0008-2		

COMPUTER GENERATED DRAWING
REVISIONS MUST BE MADE TO DATABASE
AUTOCAD RELEASE 13

NOTES: UNLESS OTHERWISE SPECIFIED

1. MATERIAL: 30 AWG COPPER WIRE WITH POLYURETHANE INSULATION AND 130 °C MINIMUM SOFTENING TEMPERATURE POLYVINYL BUTYRAL BONDING LAYER. OVERALL WIRE DIAMETER .0100 ±.0001.
2. APPLY HEAT AS REQUIRED TO FUSE COIL AFTER WINDING.
3. WIRES MUST EXIT COIL AS SHOWN. WIRES MUST NOT UNRAVEL.
4. NUMBER OF TURNS: 71
5. INDUCTANCE (uH): 690 ±14
6. DC RESISTANCE AT 25 °C (OHMS): 5.8 ±.5 (REF)
7. RESONANT FREQUENCY (KHz): 930 ±150 (REF)
8. OPERATING TEMPERATURE RANGE (°C): −40 TO +85

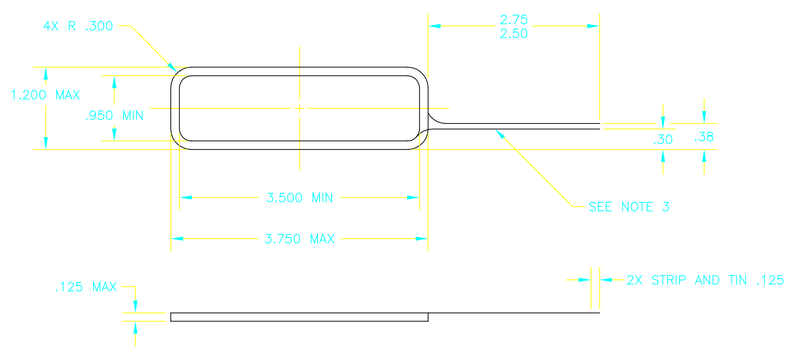

−01 PART

FIND NO	CAGE NO	QTY REQD	PART OR IDENTIFYING NO	NOMENCLATURE OR DESCRIPTION

PARTS LIST

EXCEPT AS NOTED DIM ARE IN INCHES PER ANSI Y14.5M
.XX ±.03 .XXX ±.020 ANGLES ±1°

MATERIAL: SEE NOTE 1

FINISH: NONE

DO NOT SCALE DRAWING

APPROVALS		DATE
DWN	R. ARSENEAU	032494
CHK	G. FOSSEN	032594
APVD	J. GRIFFIN	032894
APVD	M. JONES	032994
	K. BUTTE	033094

HUGHES IDENTIFICATION DEVICES
TUSTIN, CALIFORNIA

COIL, ANTENNA

SIZE	CAGE CODE	DWG NO	REV
C		40−0008	C

SCALE 1/1 SHEET 1 OF 1

THIS DOCUMENT CONTAINS PROPRIETARY INFORMATION. IT MAY NOT BE DISCLOSED TO OTHERS OR USED FOR MANUFACTURING PURPOSES WITHOUT PERMISSION FROM HUGHES IDENTIFICATION DEVICES.

DWG NO 40−0008 SH 1

00001−HID FEB 92