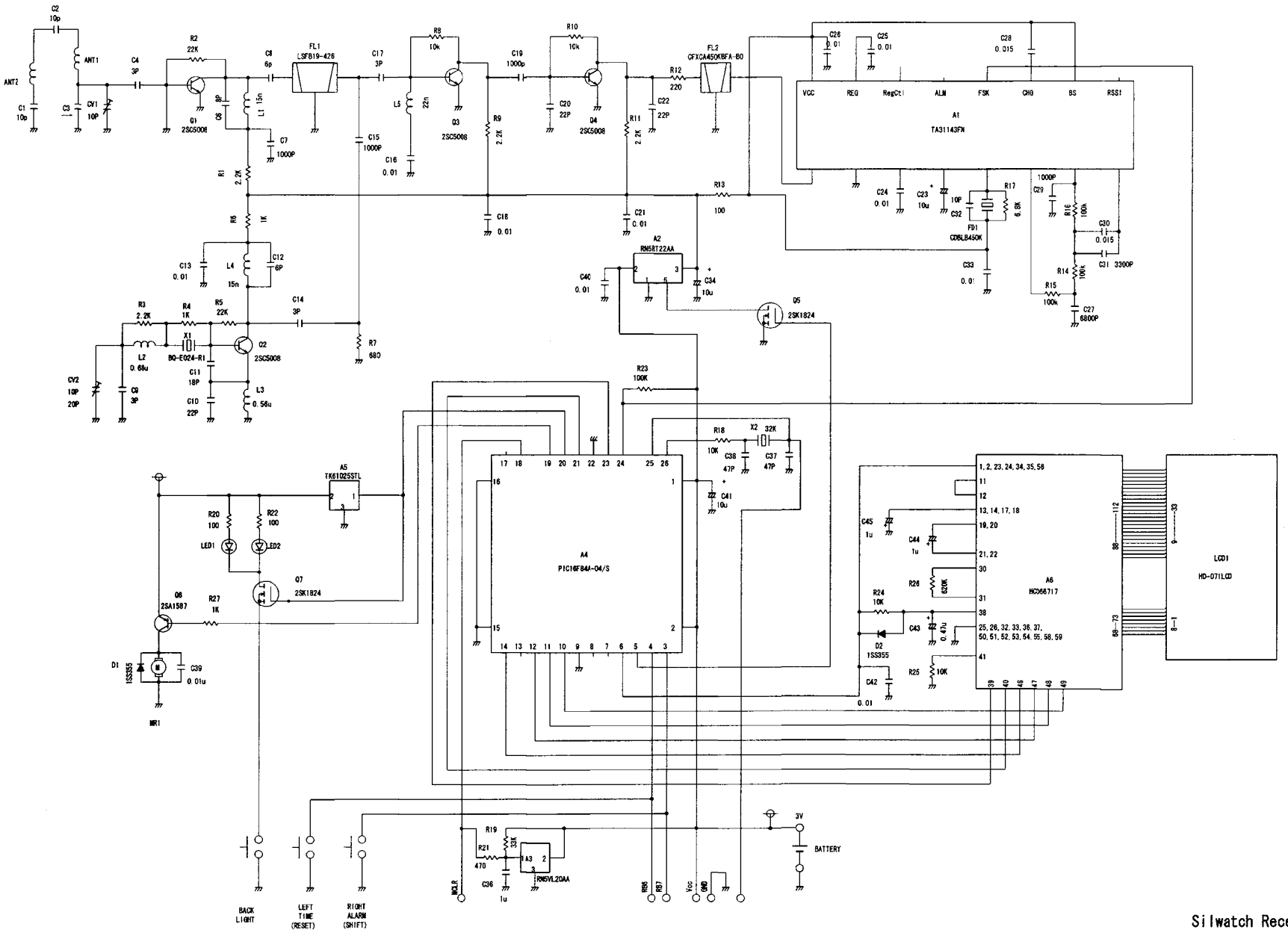

Silwatch Receiver
Schematic Diagram