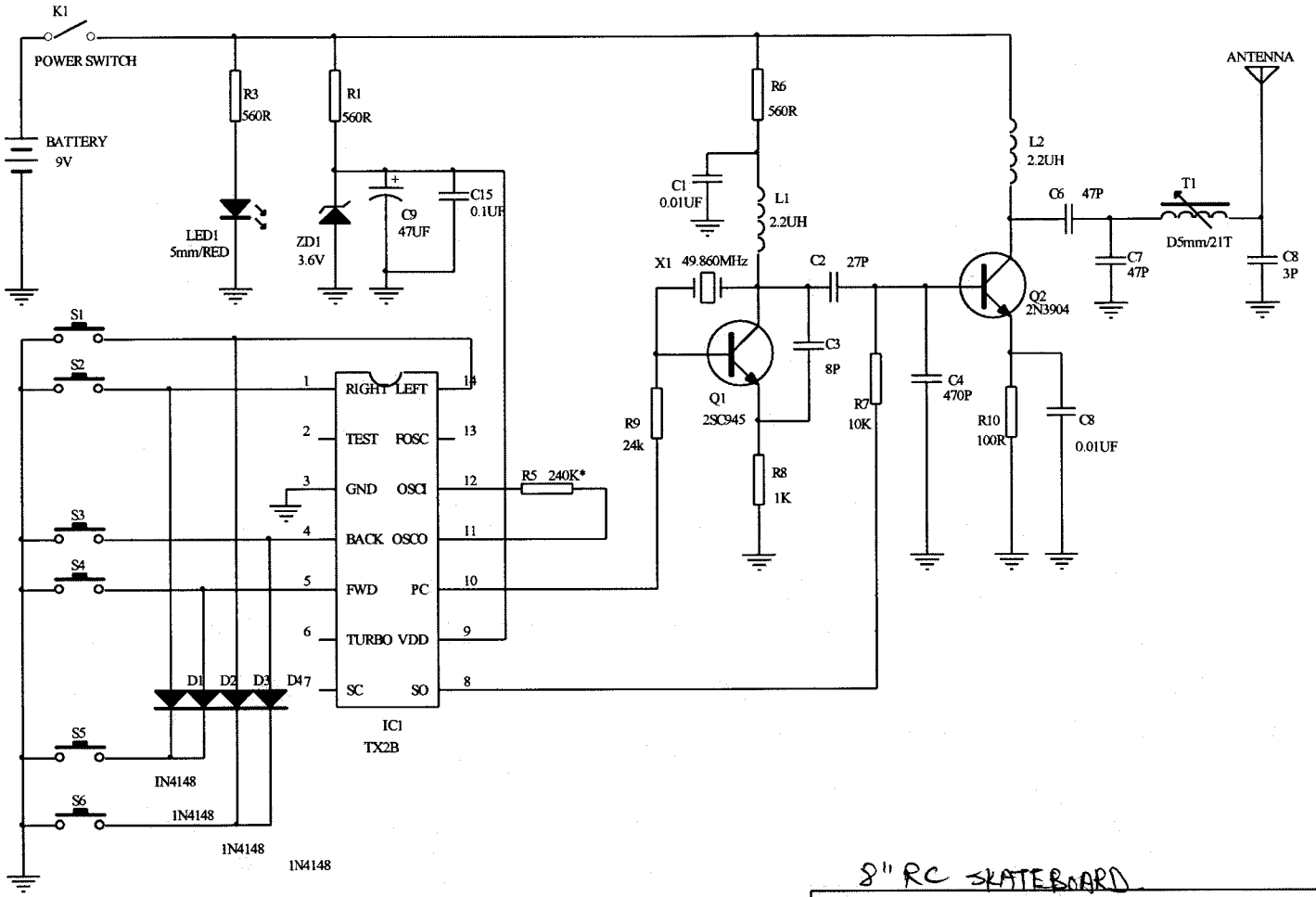

8" RC SKATEBOARD

TOYS FAMILY COMPANY LIMITED		
Title : LT05 49MHz Transmitter Schematic		
Size : A4	Revision : V1.0	Drawn by : Wiley
DATE: Mar-19-2003	Sheet of :	Check by :