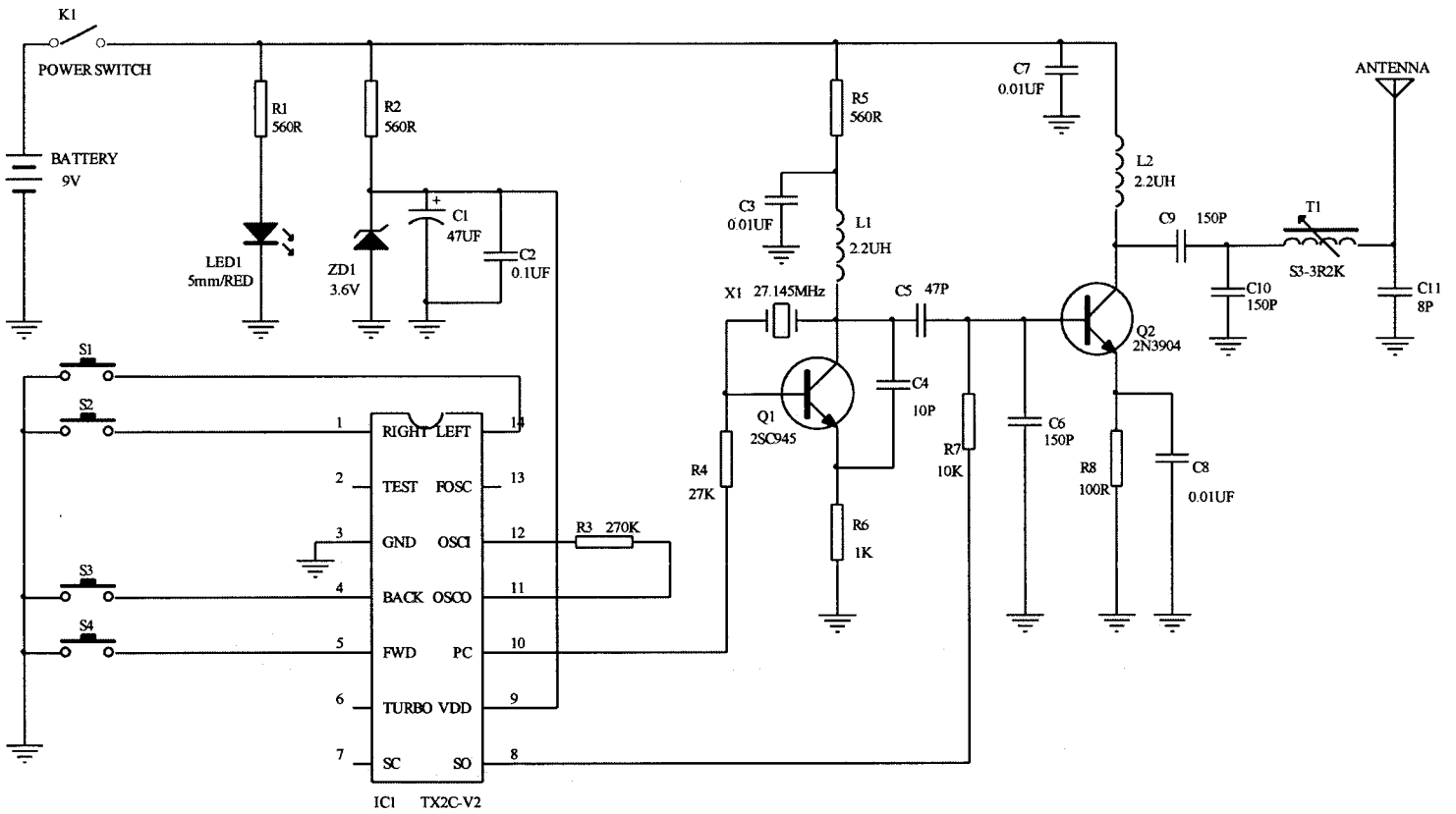

TOYS FAMILY COMPANY LIMITED		
Title : 3 INCH R/C 27MHz TRANSMITTER SCHEMATIC		
Size : A4	Revision : V2.5	Drawn by : WILEY
DATE: Mar-27-2003	Sheet of :	Check by :