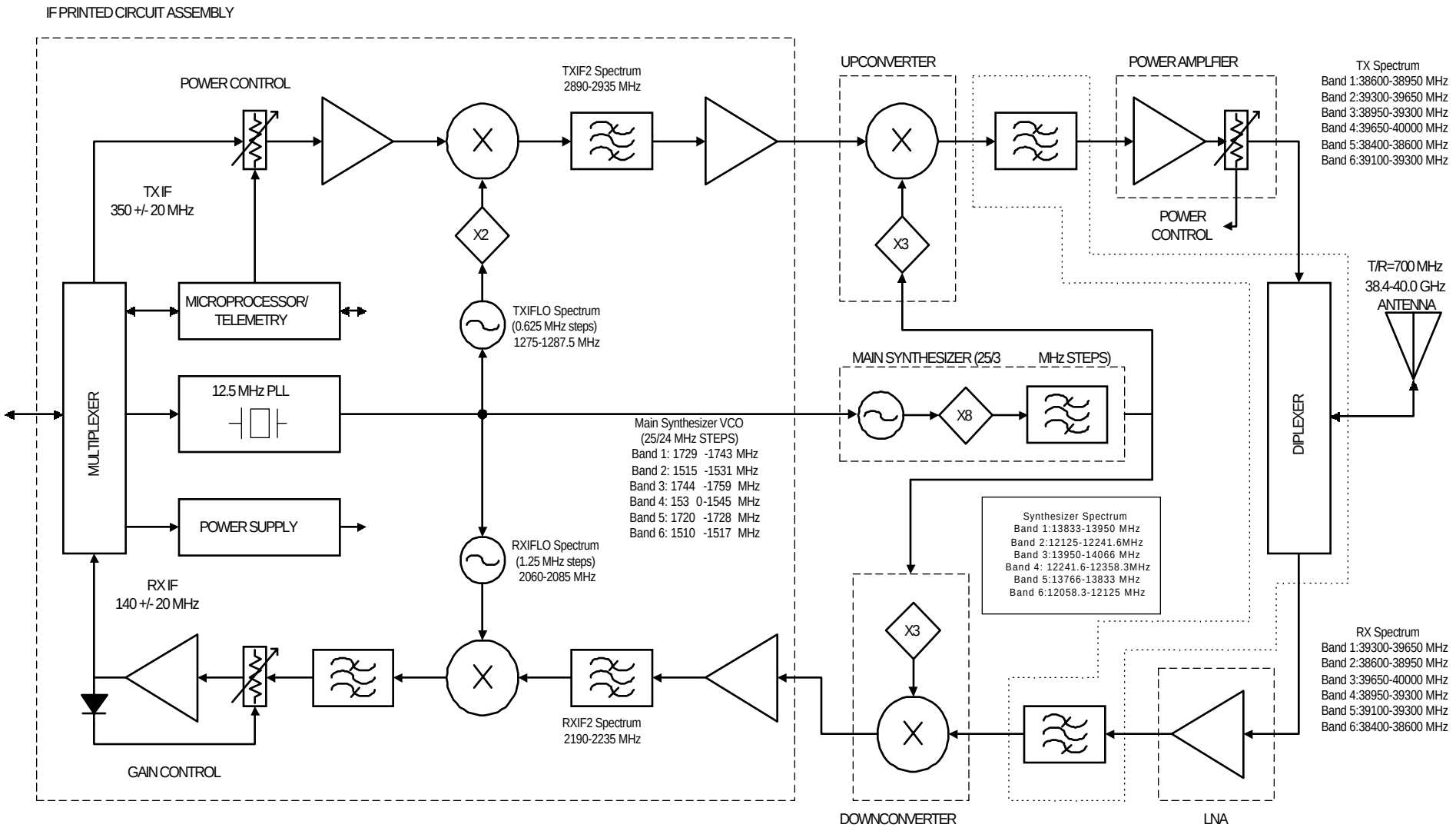39 GHz Radio Block Diagram