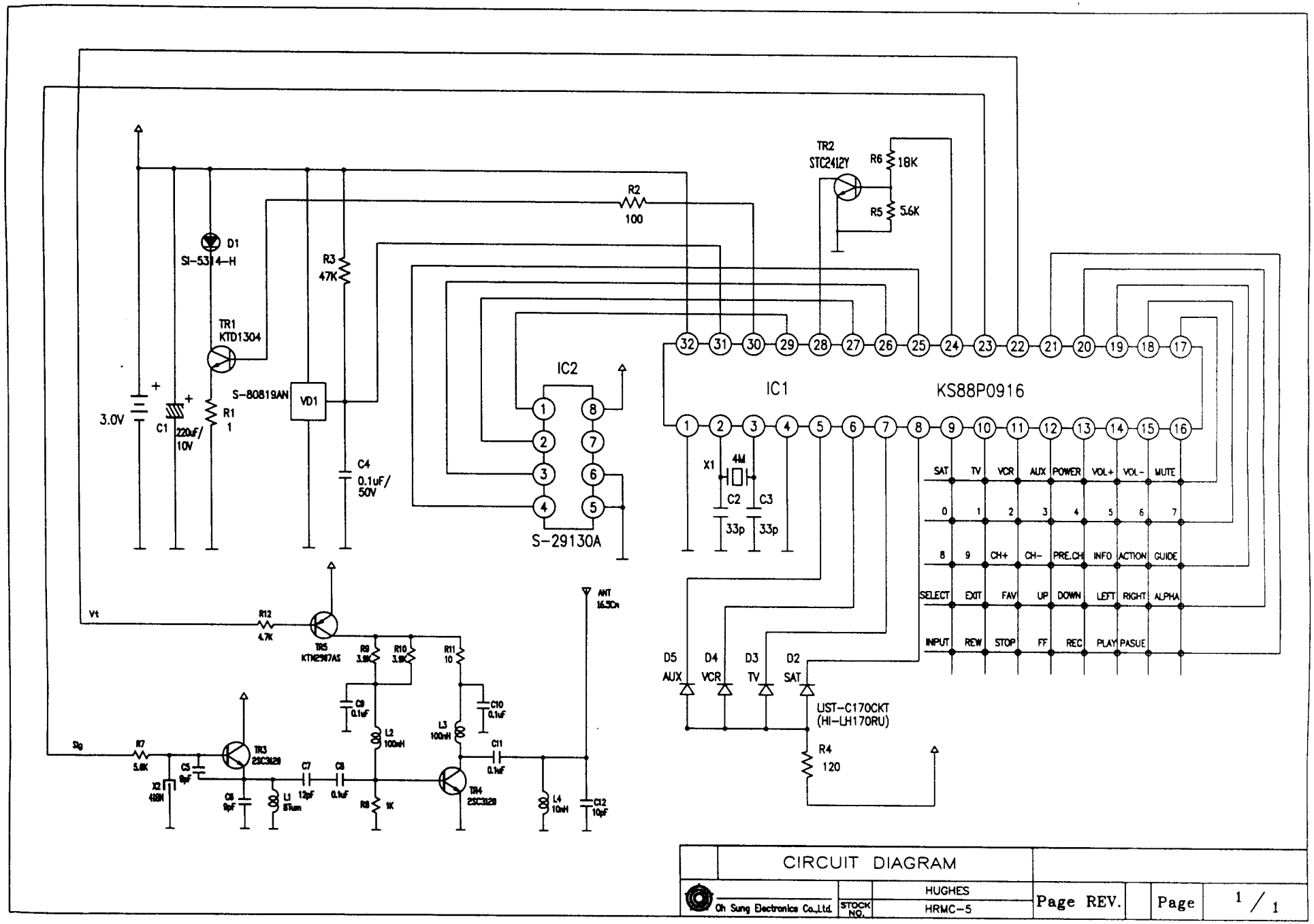

CIRCUIT DIAGRAM					
Oh Sung Electronics Co.,Ltd.	STOCK NO.	HUGHES HRMC-5	Page REV.	Page	1 / 1

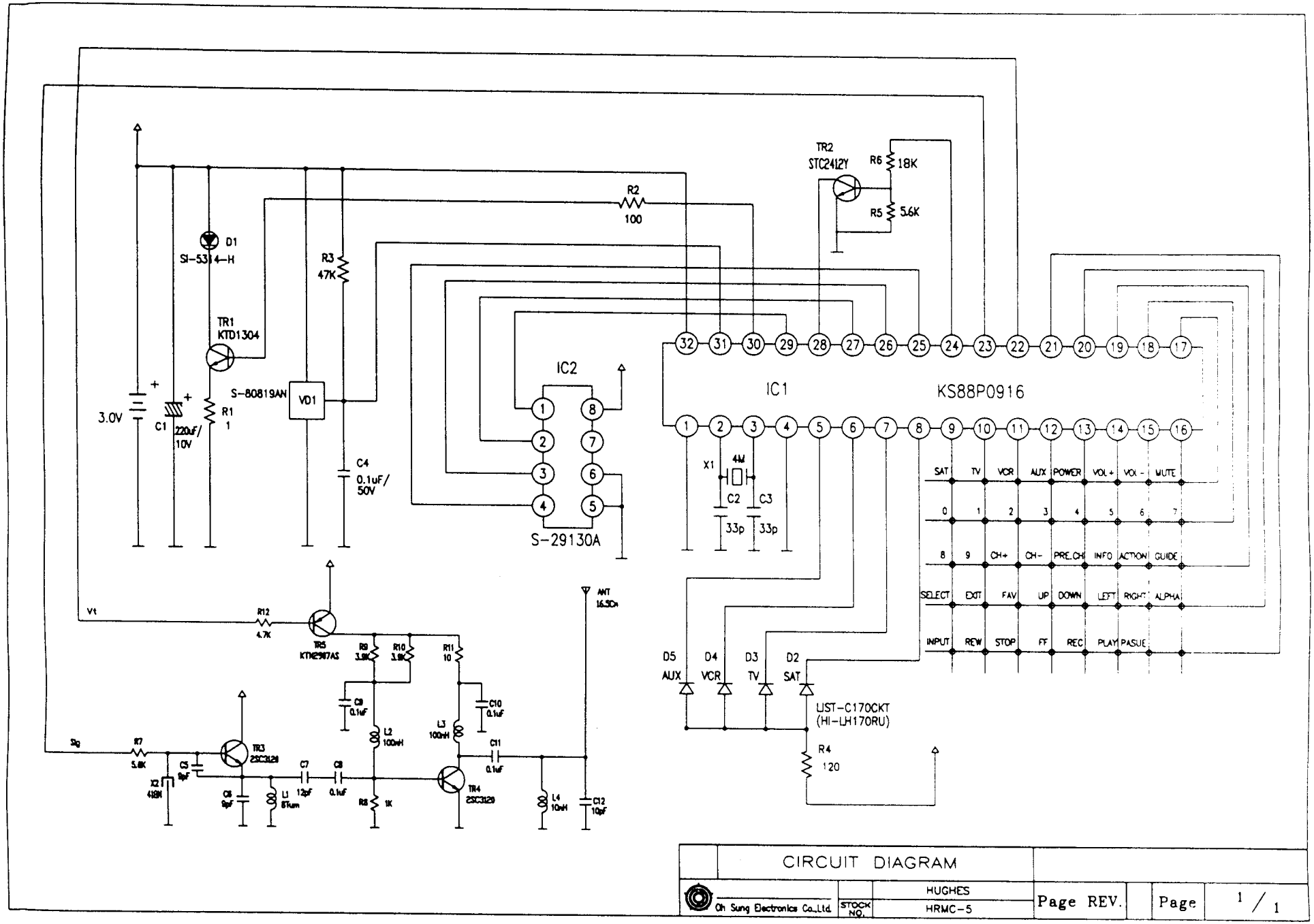

CIRCUIT DIAGRAM				
Oh Sung Electronics Co.,Ltd.	STOCK NO.	HUGHES HRMC-5	Page REV.	Page 1 / 1