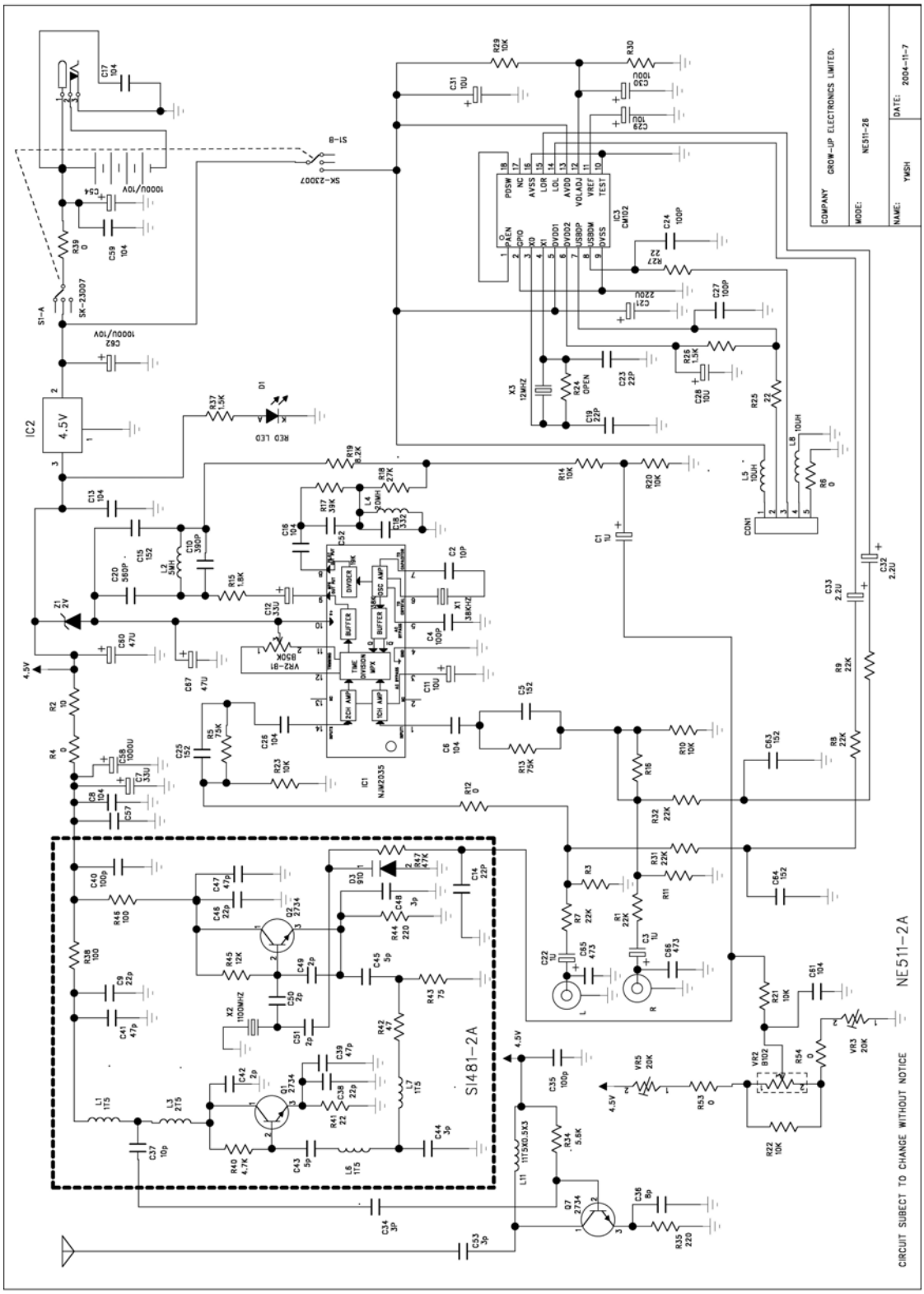ne511-26.sch-1 - Tue Nov 16 14:27:18 2004