DATE	REV. LEVEL	REVISION RECORD	AUTH	DR	CK
1-6-00		CN1128		TAS	W.S.
2-14-00		CN1155		TAS	W.S.

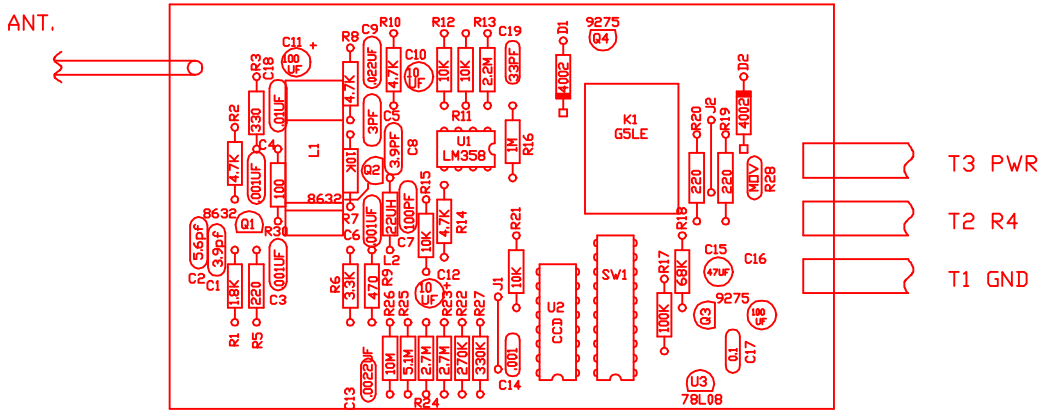

TOLERANCES (EXCEPT AS NOTED)	KDS CONTROLS, INC. TROY, MI		
X.XX ± .01	REFERENCE	SCALE	DRAWN BY T.A.S. APPROVED BY
X.XXX ± .005	TITLE COMPONENT LAYOUT		
ANGULAR ± .5°	DATE	DRAWING NUMBER CR-5100 SHEET 1 OF 1	SIZE C

CR-5100