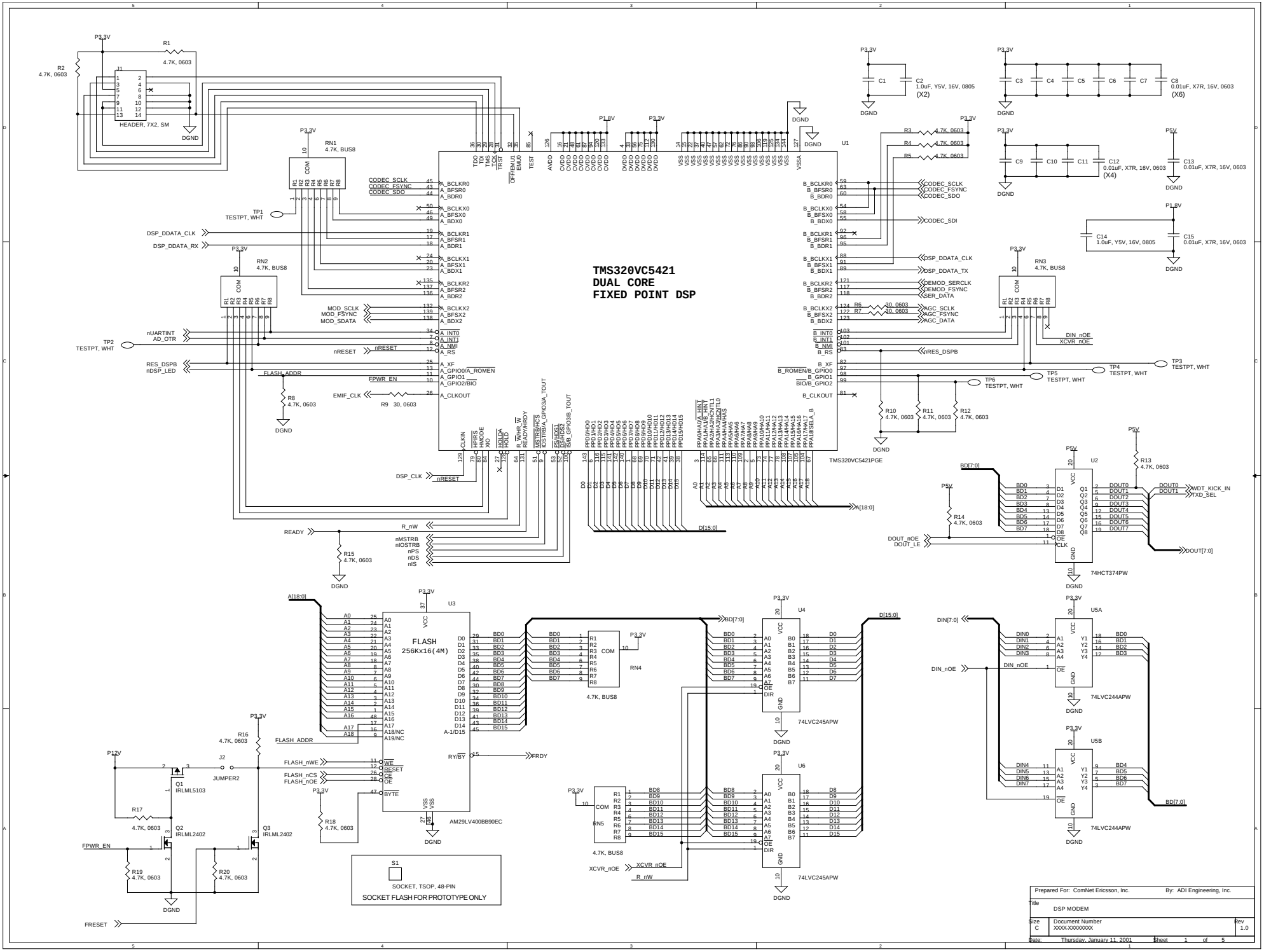
TMS320VC5421
DUAL CORE
FIXED POINT DSP
TMS320VC5421PGE
U1
HEADER, 7X2, SM
J1
RN1
4.7K, BUS8
RN2
4.7K, BUS8
RN3
4.7K, BUS8
RN4
4.7K, BUS8
RN5
4.7K, BUS8
U2
74HCT374PW
U3
FLASH
256Kx16(4M)
AM29LV400BB90EC
U4
74LVC245APW
U5A
74LVC244APW
U5B
74LVC244APW
U6
74LVC245APW
C1
C2
1.0uF, Y5V, 16V, 0805
(X2)
C3
C4
C5
C6
C7
C8
0.01uF, X7R, 16V, 0603
(X6)
C9
C10
C11
C12
0.01uF, X7R, 16V, 0603
(X4)
C13
0.01uF, X7R, 16V, 0603
C14
1.0uF, Y5V, 16V, 0805
C15
0.01uF, X7R, 16V, 0603
Q1
IRLML5103
Q2
IRLML2402
Q3
IRLML2402
J2
JUMPER2
S1
SOCKET, TSOP, 48-PIN
SOCKET FLASH FOR PROTOTYPE ONLY
Prepared For: ComNet Ericsson, Inc.
By: ADI Engineering, Inc.
Title
DSP MODEM
Size
C
Document Number
XXXX-XXXXXXXX
Rev
1.0
Date: Thursday, January 11, 2001
Sheet 1 of 5

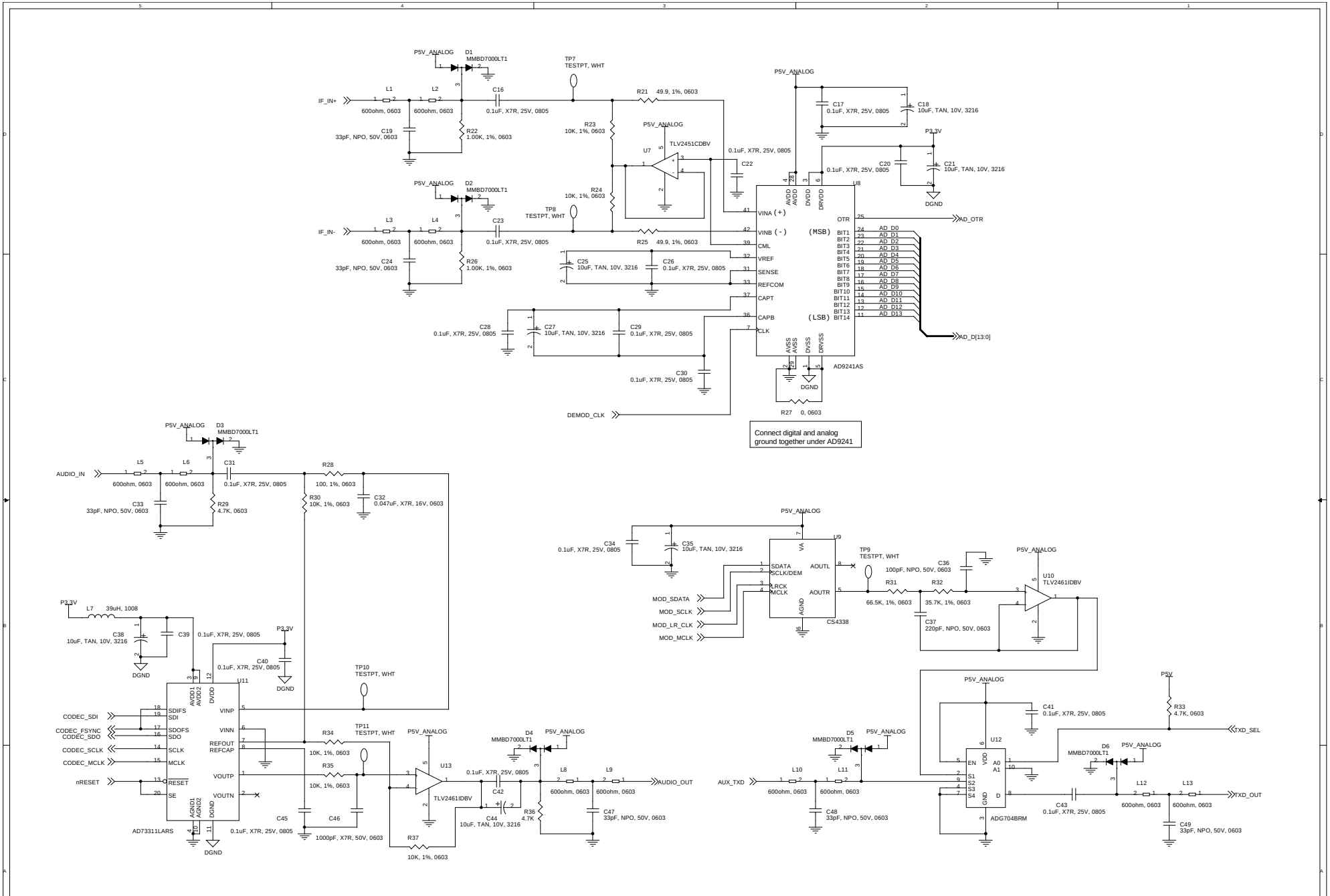

Prepared For: ComNet Ericsson, Inc.	By: ADI Engineering, Inc.
Title: DSP MODEM	
Size: C	Document Number: XXXX-XXXXXXXX	Rev: 1.0
Date: Thursday, January 11, 2001	Sheet 2 of 5

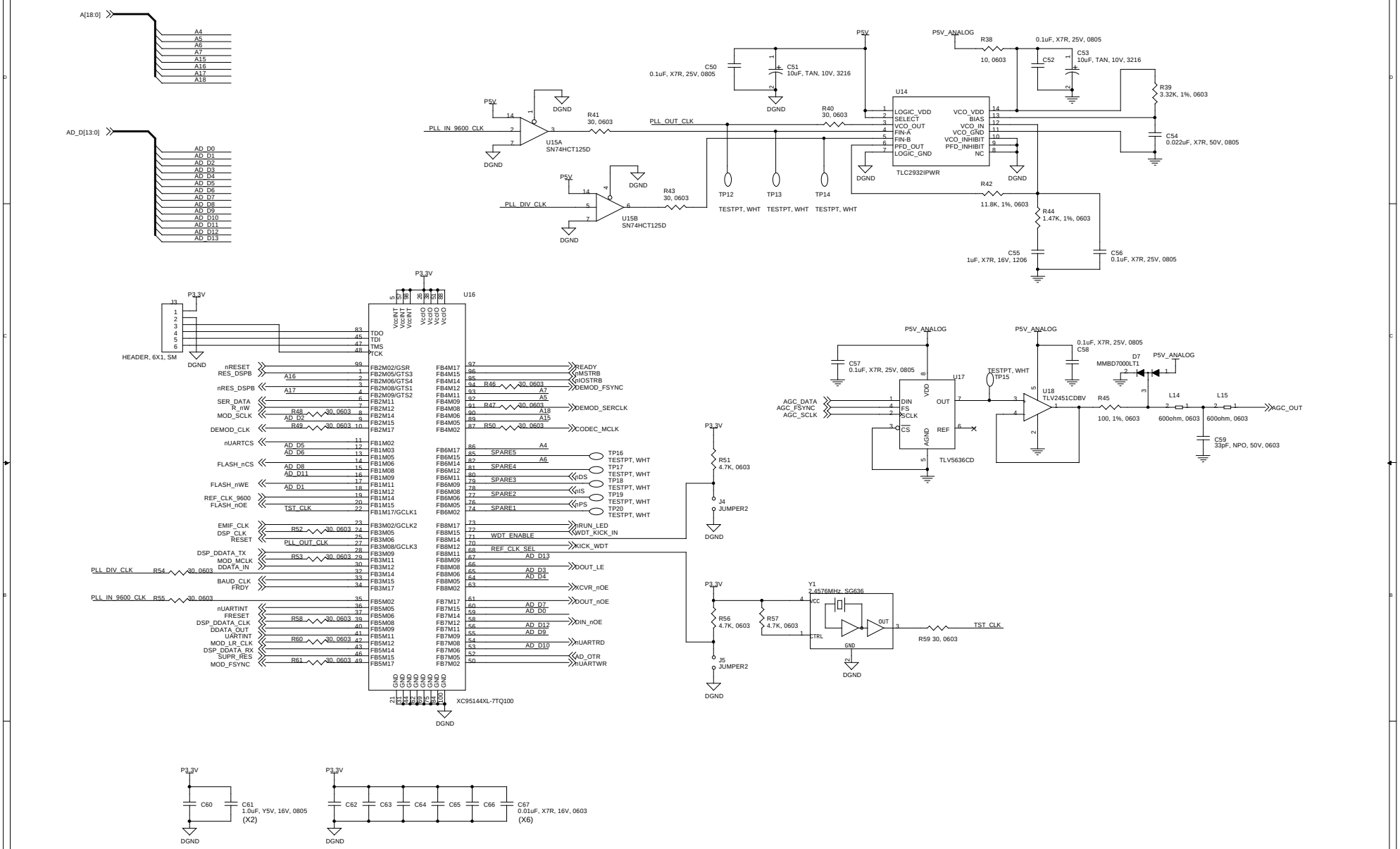

Prepared For: ComNet Ericsson, Inc.		By: ADI Engineering, Inc.
Title: DSP MODEM		
Size: C	Document Number: XXXX-XXXXXXXX	Rev: 1.0
Date: Thursday, January 11, 2001	Sheet 3 of 5	

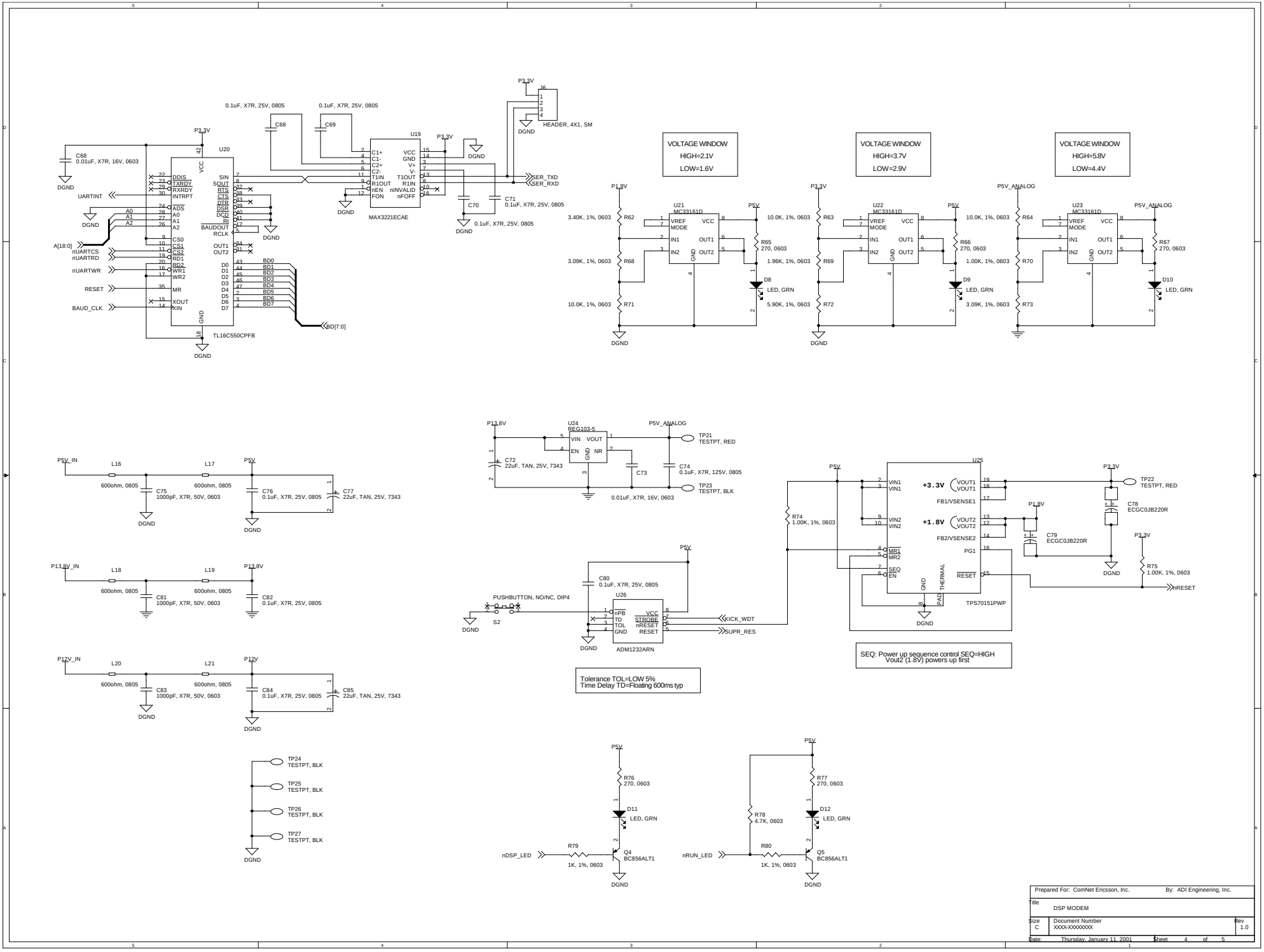
U20
TL16C550CPFB
U19
MAX3221ECAE
J6
HEADER, 4X1, SM
C68
C69
C70
C71
0.1uF, X7R, 25V, 0805
C68
0.01uF, X7R, 16V, 0603
P3.3V
DGND
UARTINT
A[18:0]
nUARTCS
nUARTRD
nUARTWR
RESET
BAUD_CLK
BD[7:0]
SER_TXD
SER_RXD
VOLTAGE WINDOW
HIGH=2.1V
LOW=1.6V
VOLTAGE WINDOW
HIGH=3.7V
LOW=2.9V
VOLTAGE WINDOW
HIGH=5.8V
LOW=4.4V
U21
U22
U23
MC33161D
P1.8V
P5V
P5V_ANALOG
R62
R68
R71
R63
R69
R72
R64
R70
R73
3.40K, 1%, 0603
3.09K, 1%, 0603
10.0K, 1%, 0603
R65
R66
R67
270, 0603
1.96K, 1%, 0603
5.90K, 1%, 0603
1.00K, 1%, 0603
3.09K, 1%, 0603
D8
D9
D10
LED, GRN
P5V_IN
L16
L17
600ohm, 0805
C75
1000pF, X7R, 50V, 0603
C76
0.1uF, X7R, 25V, 0805
C77
22uF, TAN, 25V, 7343
P13.8V_IN
L18
L19
P13.8V
C81
C82
P12V_IN
L20
L21
P12V
C83
C84
C85
TP24
TP25
TP26
TP27
TESTPT, BLK
U24
REG103-5
C72
22uF, TAN, 25V, 7343
C73
0.01uF, X7R, 16V, 0603
C74
0.1uF, X7R, 125V, 0805
TP21
TESTPT, RED
TP23
TESTPT, BLK
U25
TPS70151PWP
+3.3V
+1.8V
FB1/VSENSE1
FB2/VSENSE2
PG1
R74
1.00K, 1%, 0603
TP22
C78
ECGC0JB220R
C79
ECGC0JB220R
R75
1.00K, 1%, 0603
nRESET
C80
PUSHBUTTON, NO/NC, DIP4
S2
U26
ADM1232ARN
KICK_WDT
SUPR_RES
SEQ: Power up sequence control SEQ=HIGH
Vout2 (1.8V) powers up first
Tolerance TOL=LOW 5%
Time Delay TD=Floating 600ms typ
R76
270, 0603
D11
R79
1K, 1%, 0603
Q4
BC856ALT1
nDSP_LED
R77
270, 0603
D12
R78
4.7K, 0603
R80
1K, 1%, 0603
Q5
BC856ALT1
nRUN_LED
Prepared For: ComNet Ericsson, Inc.
By: ADI Engineering, Inc.
Title
DSP MODEM
Size
C
Document Number
XXXX-XXXXXXXX
Rev
1.0
Date: Thursday, January 11, 2001
Sheet 4 of 5

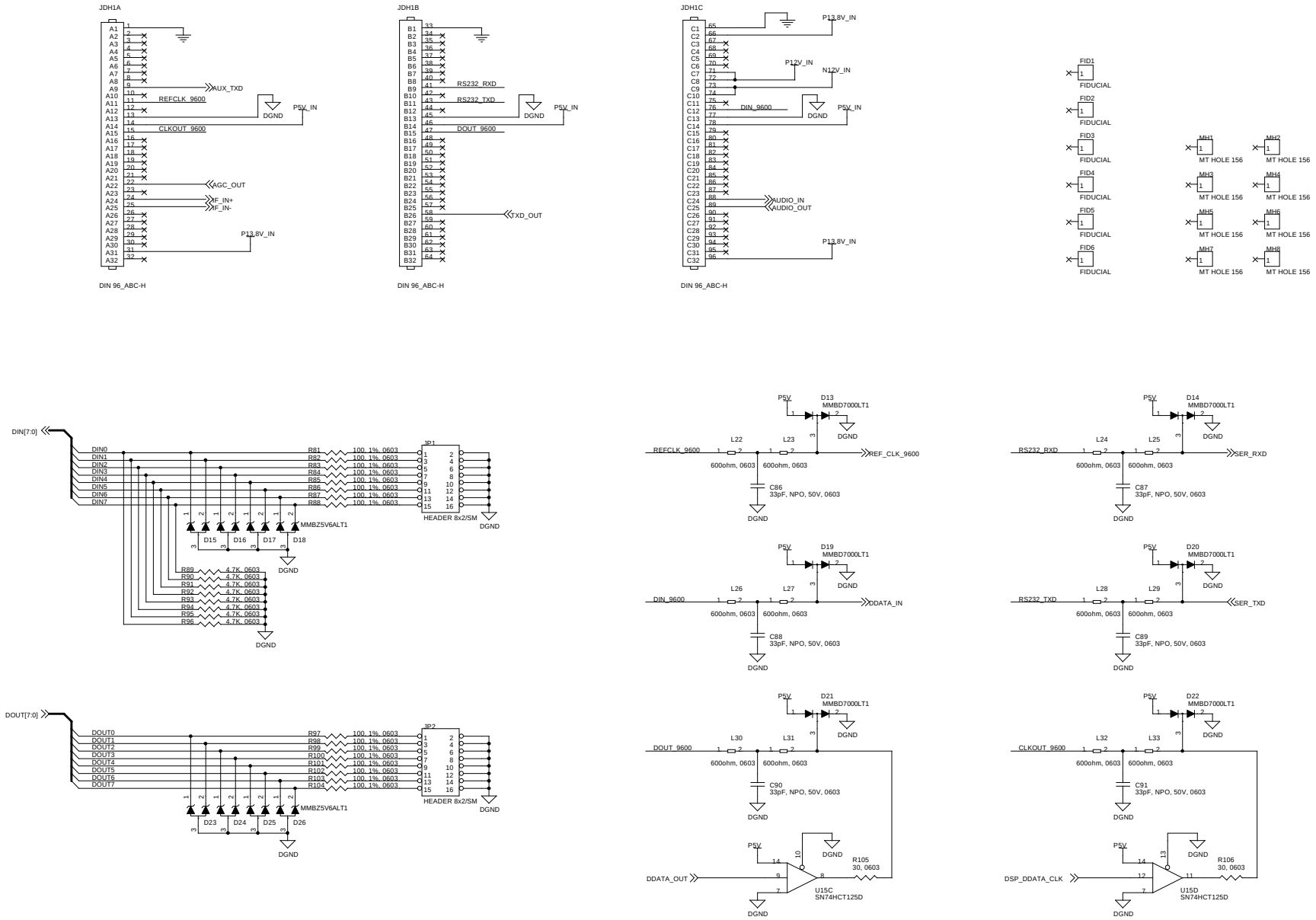

Prepared For: ComNet Ericsson, Inc.		By: ADI Engineering, Inc.
Title: DSP MODEM		
Size: C	Document Number: XXXX-XXXXXXXX	Rev: 1.0
Date: Thursday, January 11, 2001	Sheet 5 of 5	