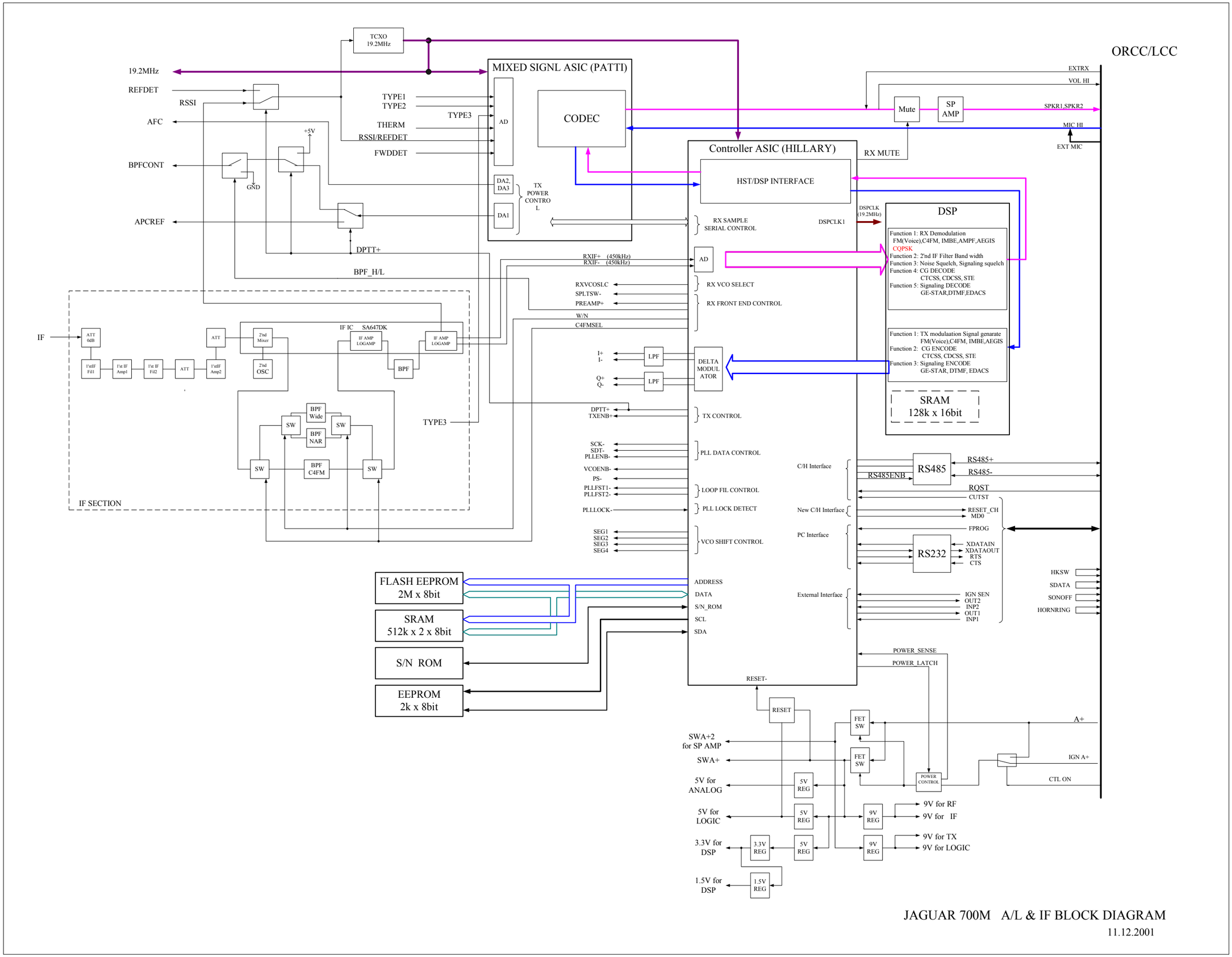

JAGUAR 700M A/L & IF BLOCK DIAGRAM

11.12.2001