LAST USED REF
R99
C74
J16
CR23
U26
Q17
TB1
T1-230
L3
Y3
DS6
SW5
W1
V8
PS1

RF RELAY INTERFACES

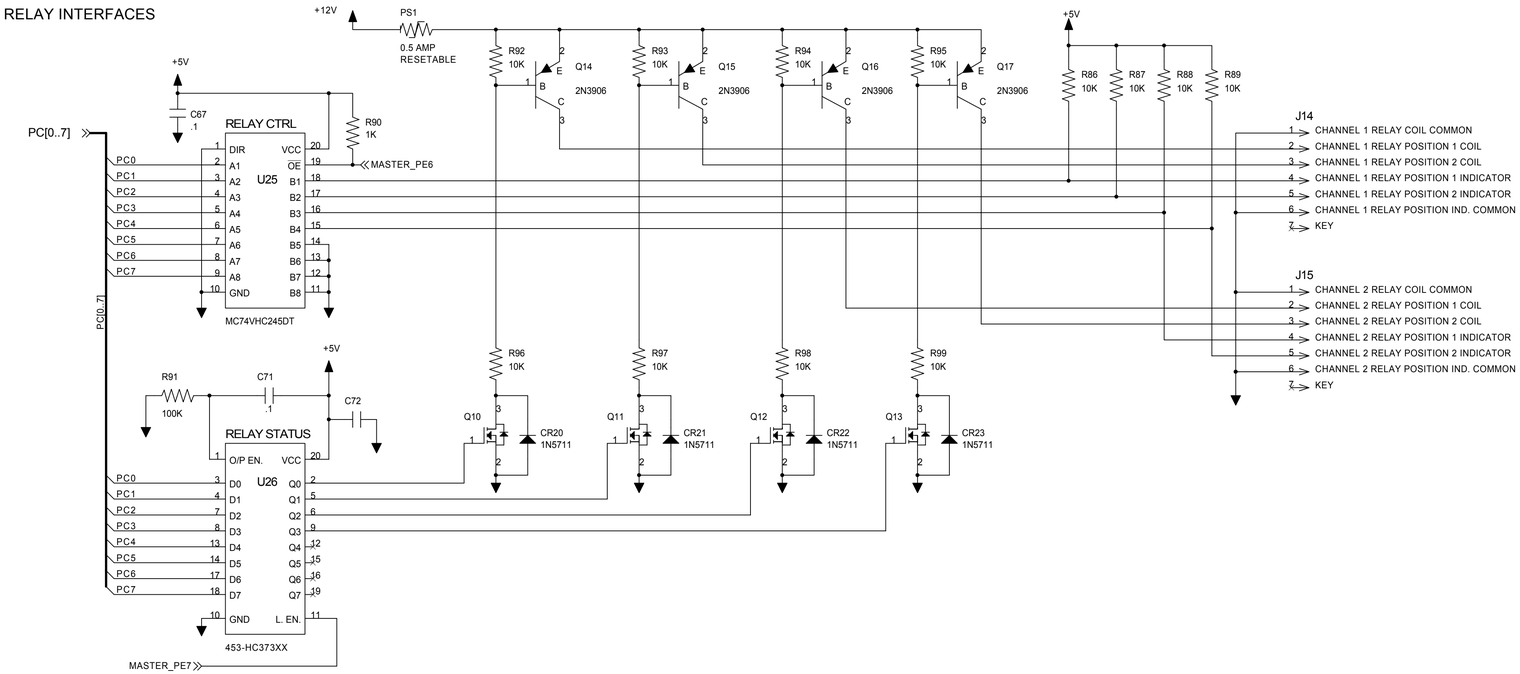

AMPLIFIER RJ45 INTERFACE

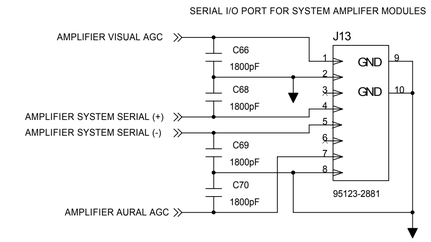

EXCITER SWITCHER RJ45 INTERFACE

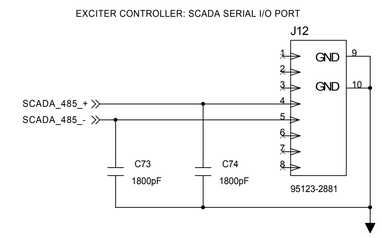

APV	Axcera	REV	ECO	DATE	APV
DATE	THIS PRINT IS THE PROPERTY OF AXCERA, IT SHALL NOT BE COPIED WITHOUT PERMISSION	TITLE	SCH, EXCITER SWITCH,CTRL BD. (1305704, 1305725)		
ECO	MATERIAL -----	DWN REH 1/14/05	DWG. NO. 1305705		REV A0
REV	FINISH -----	CHK REH 2/22/05			
		REL REH 2/22/05	D	SCALE - - -	SHEET 4 OF 4

EXCITER RJ45 INTERFACES

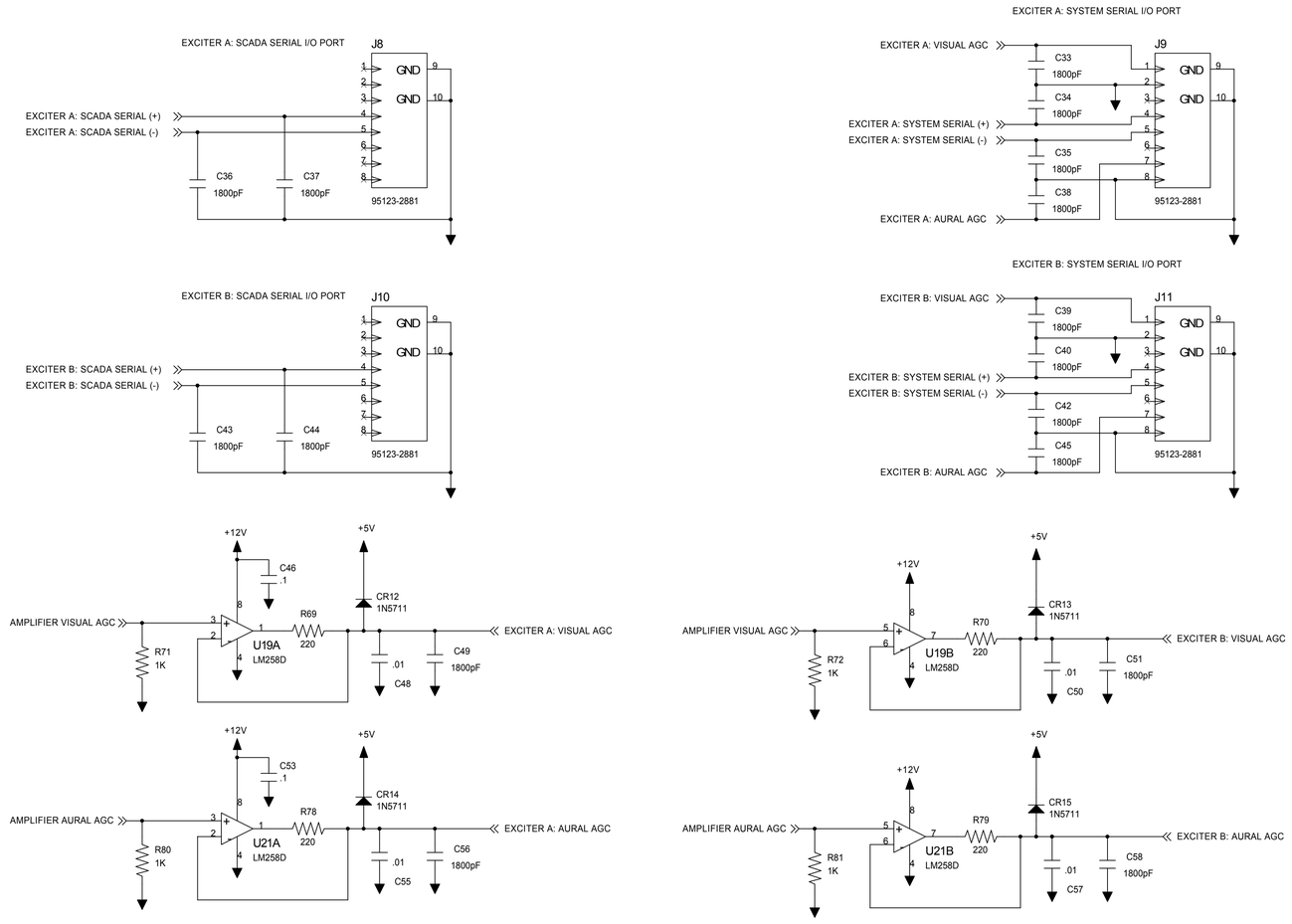

MAIN POWER INPUT

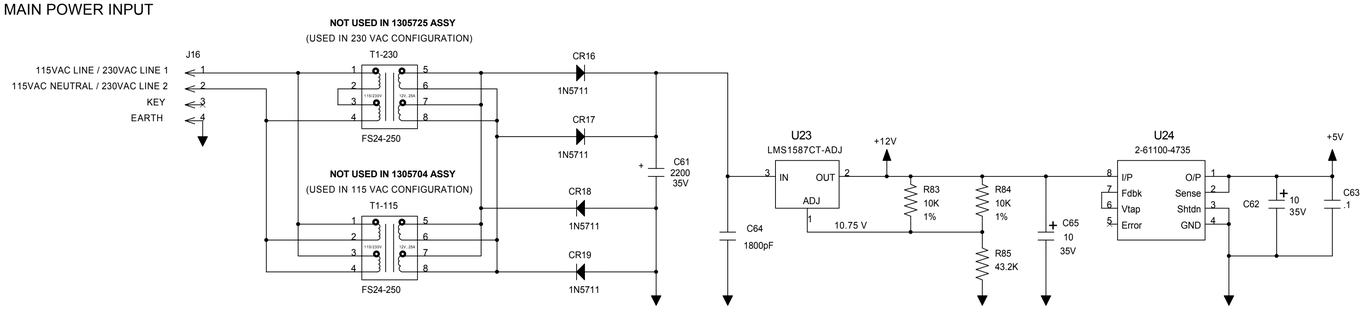

REMOTE CONTROL INTERFACES

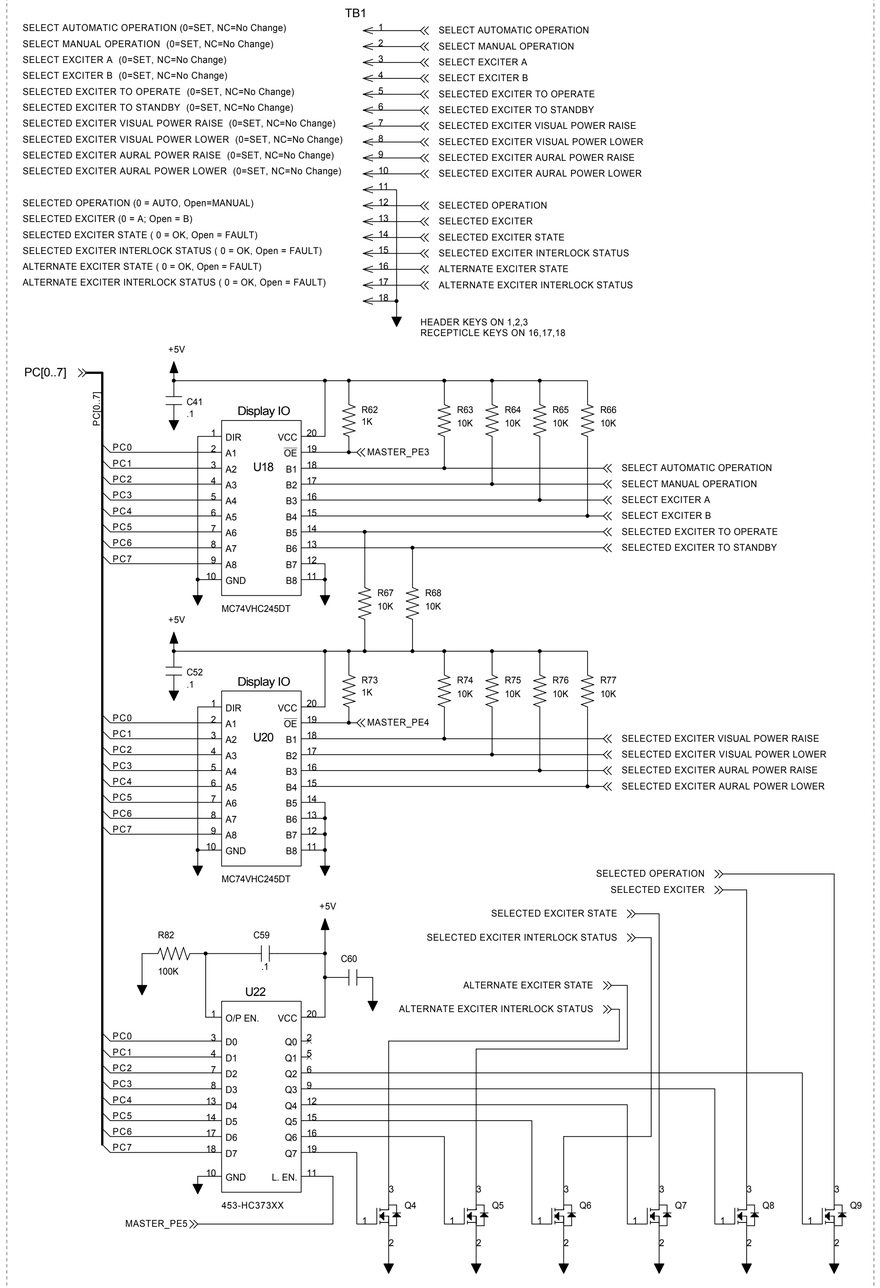

APV	**Axcera**	REV	ECO	DATE	APV
DATE	THIS PRINT IS THE PROPERTY OF AXCERA, IT SHALL NOT BE COPIED WITHOUT PERMISSION	TITLE	SCH, EXCITER SWITCH,CTRL BD. (1305704, 1305725)		
ECO	MATERIAL -----	DWN REH 1/14/05	DWG. NO. 1305705	REV A0	
REV	FINISH -----	CHK REH 2/22/05			
		REL REH 2/22/05	D	SCALE - - -	SHEET 3 OF 4

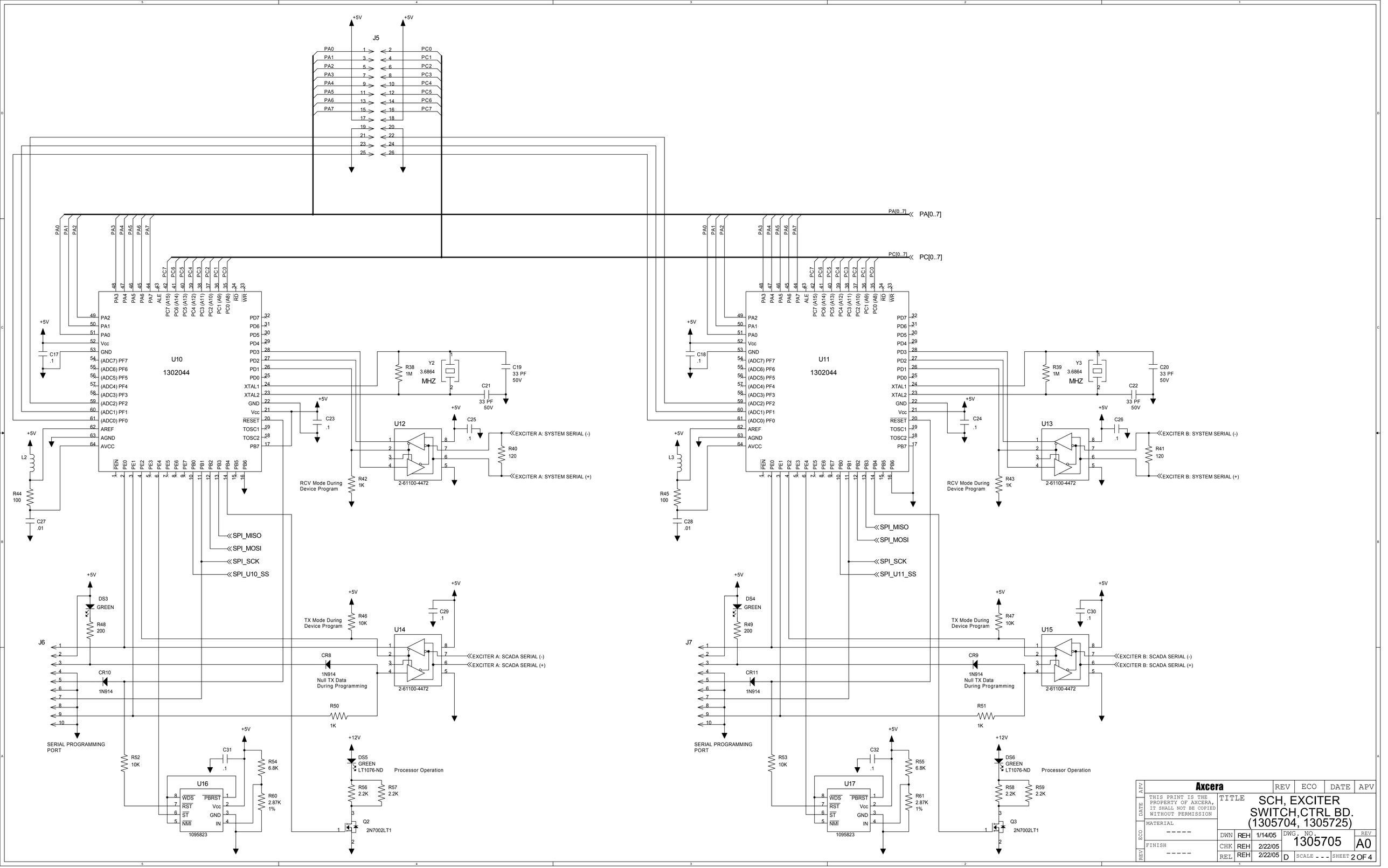
J5
PA[0..7]
PC[0..7]
U10
1302044
U11
1302044
Y2
3.6864
MHZ
Y3
3.6864
MHZ
U12
U13
2-61100-4472
EXCITER A: SYSTEM SERIAL (-)
EXCITER A: SYSTEM SERIAL (+)
EXCITER B: SYSTEM SERIAL (-)
EXCITER B: SYSTEM SERIAL (+)
RCV Mode During Device Program
SPI_MISO
SPI_MOSI
SPI_SCK
SPI_U10_SS
SPI_U11_SS
J6
J7
DS3
DS4
GREEN
TX Mode During Device Program
U14
U15
EXCITER A: SCADA SERIAL (-)
EXCITER A: SCADA SERIAL (+)
EXCITER B: SCADA SERIAL (-)
EXCITER B: SCADA SERIAL (+)
CR8
CR9
CR10
CR11
1N914
Null TX Data During Programming
SERIAL PROGRAMMING PORT
U16
U17
1095823
DS5
DS6
LT1076-ND
Processor Operation
Q2
Q3
2N7002LT1
Axcera
THIS PRINT IS THE PROPERTY OF AXCERA, IT SHALL NOT BE COPIED WITHOUT PERMISSION
TITLE
SCH, EXCITER SWITCH,CTRL BD. (1305704, 1305725)
MATERIAL
FINISH
DWN REH 1/14/05
CHK REH 2/22/05
REL REH 2/22/05
DWG. NO. 1305705
REV A0
SCALE - - -
SHEET 2 OF 4

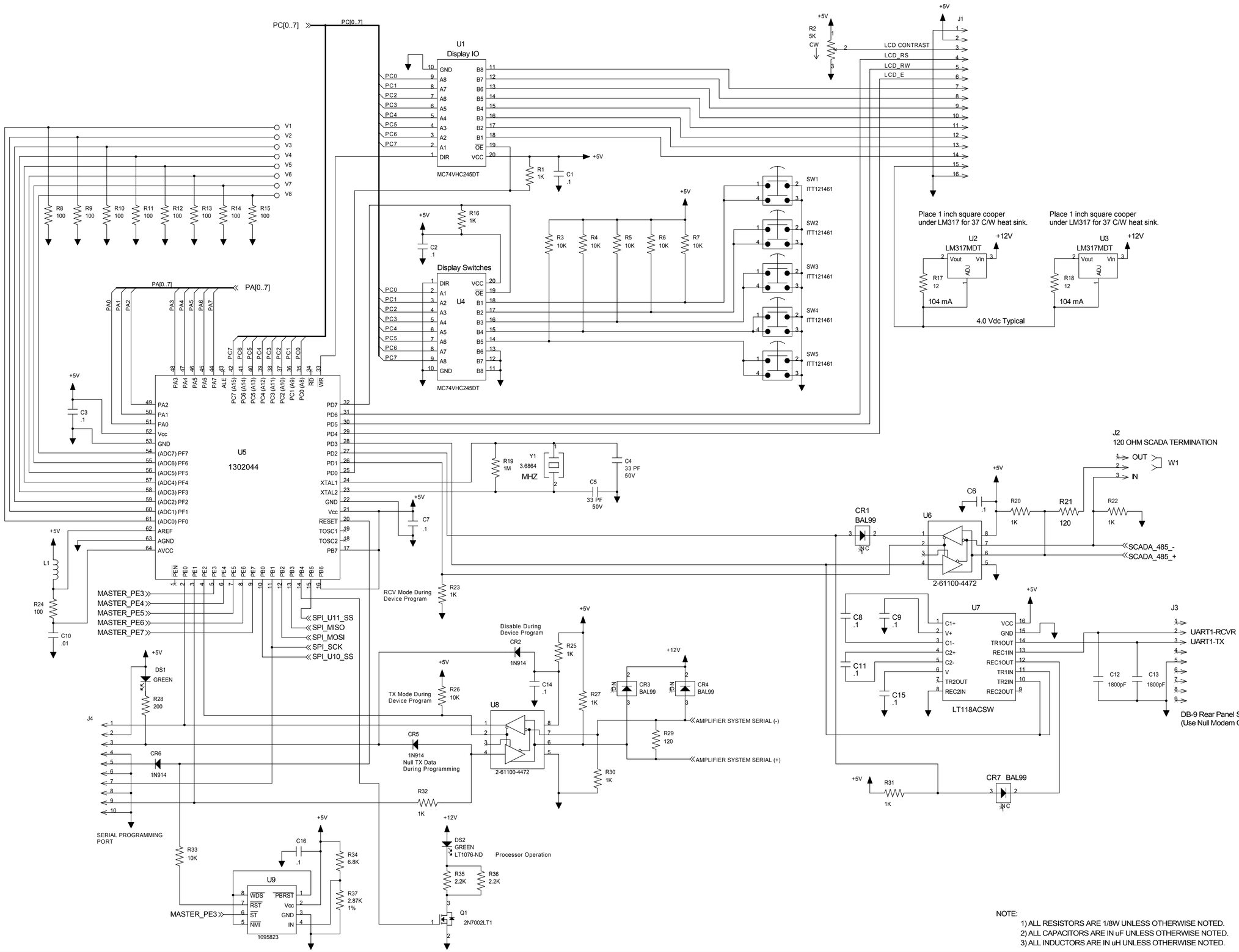

MATERIAL NUMBERS:

1305725 ASSY,EXCTR SWITCH,CTRL BD., 110V
1305704 ASSY,EXCTR SWITCH,CTRL BD., 220V

1305705 SCH,EXCTR SWITCH,CTRL BRD
1305706 PCB,EXCTR SWITCH,CTRL BRD
1305707 STENCIL FOR 1305706

NOTE:

1) ALL RESISTORS ARE 1/8W UNLESS OTHERWISE NOTED.
2) ALL CAPACITORS ARE IN uF UNLESS OTHERWISE NOTED.
3) ALL INDUCTORS ARE IN uH UNLESS OTHERWISE NOTED.

Axcera		REV	ECO	DATE	APV
THIS PRINT IS THE PROPERTY OF AXCERA, IT SHALL NOT BE COPIED WITHOUT PERMISSION	TITLE SCH, EXCITER SWITCH,CTRL BD. (1305704, 1305725)				
MATERIAL -----	DWN REH 1/14/05	DWG. NO. 1305705		REV A0	
FINISH -----	CHK REH 2/22/05				
	REL REH 2/22/05	D	SCALE - - -	SHEET 1 OF 4	

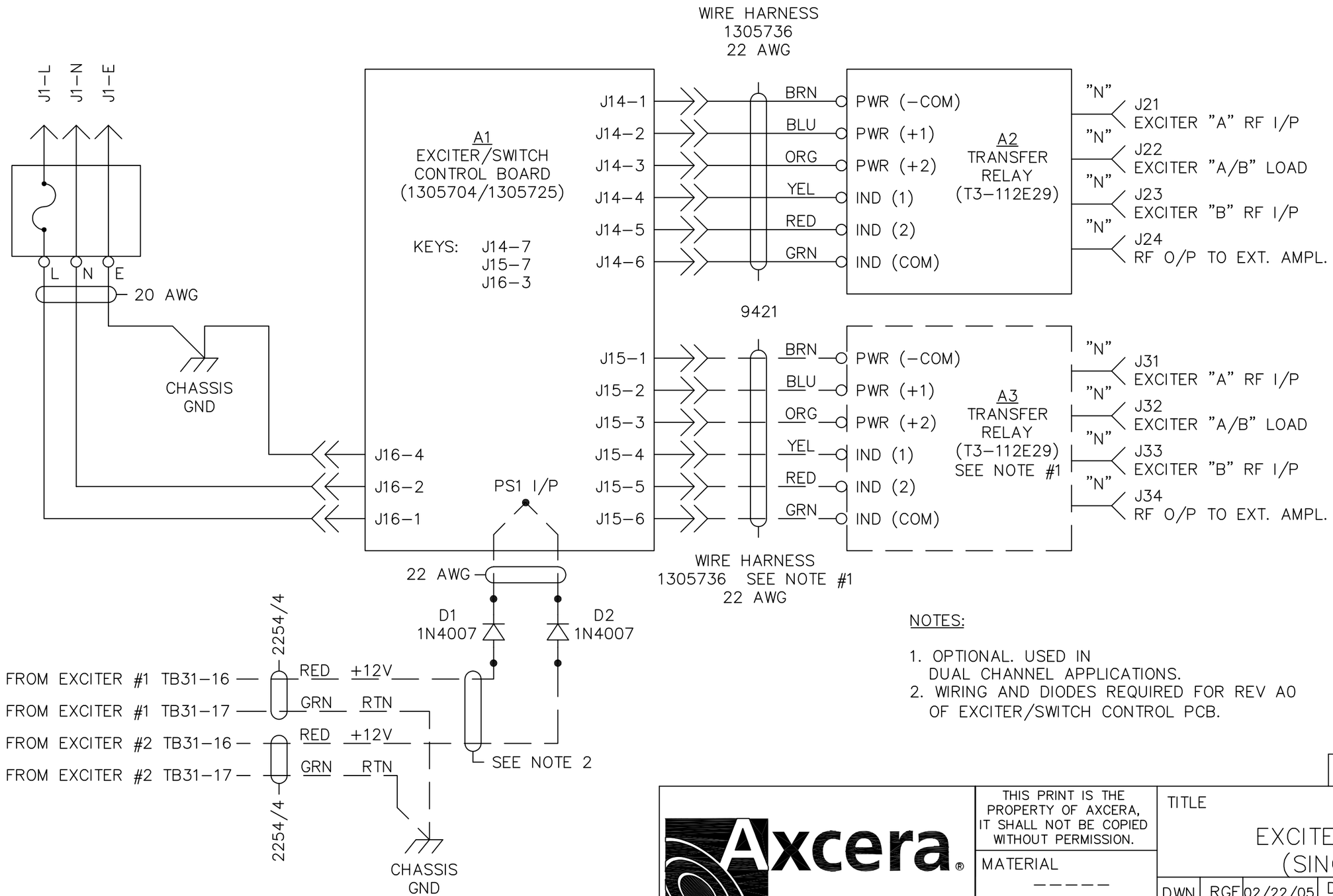

NOTES:

1. OPTIONAL. USED IN DUAL CHANNEL APPLICATIONS.
2. WIRING AND DIODES REQUIRED FOR REV A0 OF EXCITER/SWITCH CONTROL PCB.

REV	ECO	DATE	APV

Axcera®

THIS PRINT IS THE PROPERTY OF AXCERA, IT SHALL NOT BE COPIED WITHOUT PERMISSION.

MATERIAL ——————

FINISH ——————

TITLE I/C, EXCITER SWITCHER, (SINGLE/DUAL)

DWN	RGE	02/22/05	DWG. NO. 1305739	REV A0
CHK	JCM	03/03/05		
REL	JCM	03/03/05	B SCALE ———	SHEET 1 OF 1

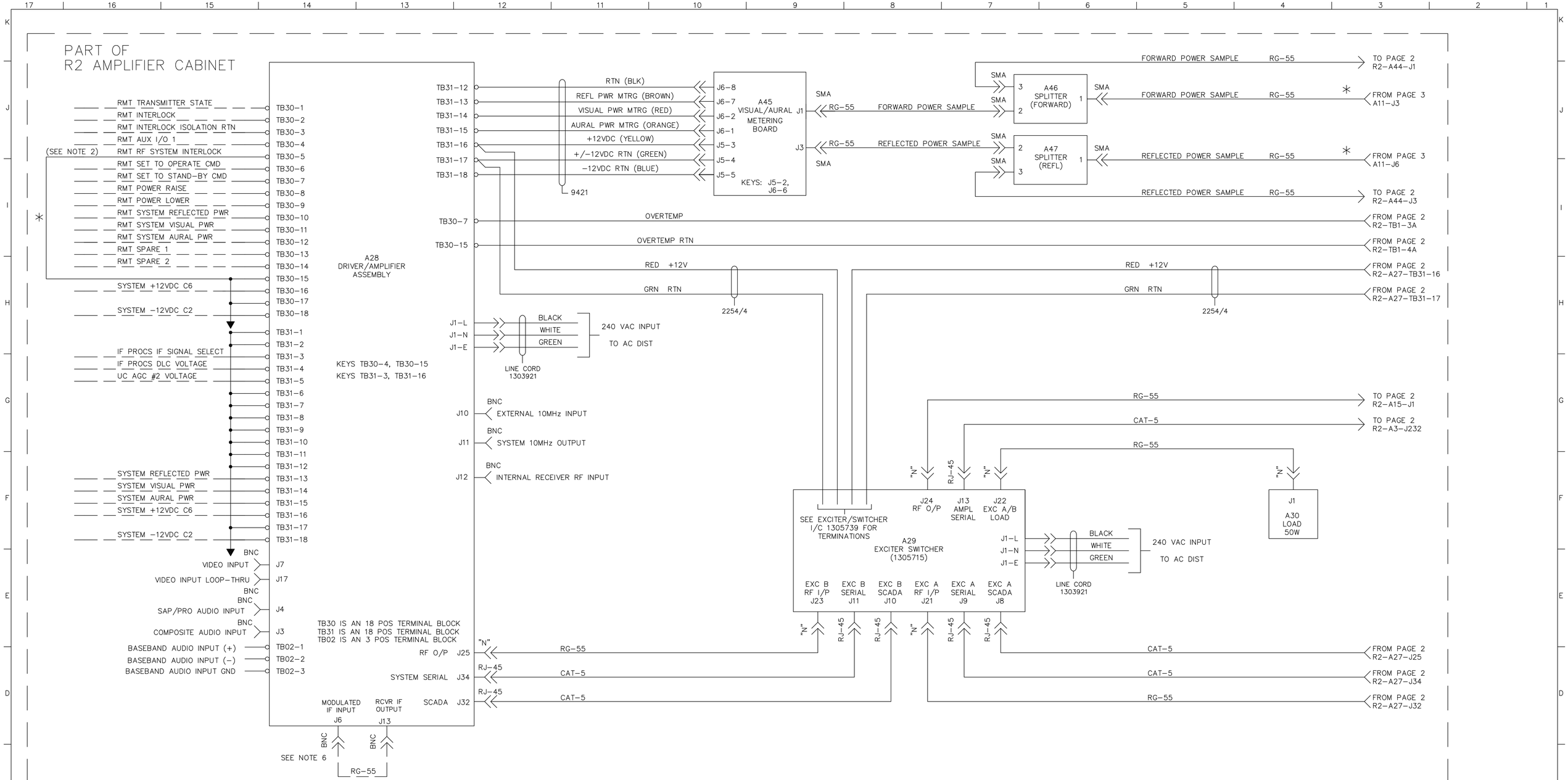

NOTE: 1) THE BOTTOM RIGHT HAND AMPLIFIER MODULE SHOULD HAVE RS485 TERMINATION SET.

2) WIRE JUMPER FROM TB30-5 TO TB30-15 MUST BE INSTALLED TO PUT THE TRANSMITTER IN THE OPERATE MODE.

3) * DENOTES CABLE/WIRE IS PART OF TRANSMITTER ASSY.

4) ALL WIRES ARE 22 AWG UNLESS OTHERWISE NOTED.

5) THESE FIVE CABLES MUST BE THE SAME LENGTH.

6) FOR USE WITH INT RCVR'S, CONNECT A27-J13 TO A27-J6. ALSO CONNECT A28-J13 TO A28-J6. USE A27-J12 AND A28-J12 AS RF INPUTS.

REV	ECO	DATE	APV

Axcera®

THIS PRINT IS THE PROPERTY OF AXCERA, IT SHALL NOT BE COPIED WITHOUT PERMISSION.

MATERIAL -----

FINISH -----

TITLE I/C 5KW XMTR/XLTR, DUAL EXC, LX

DWN	RGE	02/23/05	DWG. NO. 1305741
CHK	JCM	03/03/05	REV A0
REL	JCM	03/03/05	D SCALE --- SHEET 1 OF 3

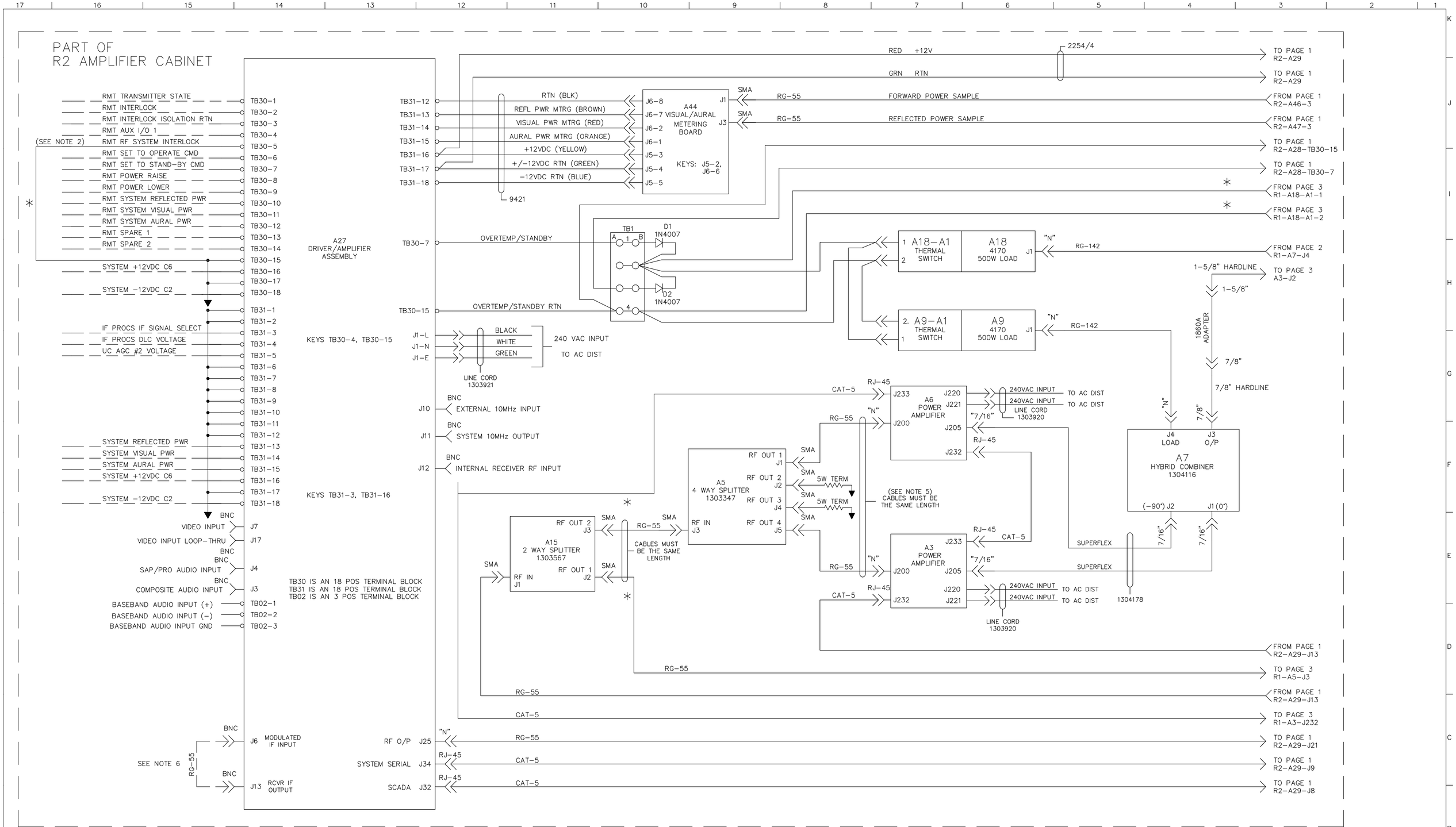

REV	ECO	DATE	APV

Axcera®

THIS PRINT IS THE PROPERTY OF AXCERA. IT SHALL NOT BE COPIED WITHOUT PERMISSION.

MATERIAL -----

FINISH -----

TITLE I/C 5KW XMTR/XLTR, DUAL EXC, LX

DWN	RGE	02/23/05	DWG. NO. 1305741	REV A0
CHK	JCM	03/03/05		
REL	JCM	03/03/05	D SCALE ---	SHEET 2 OF 3

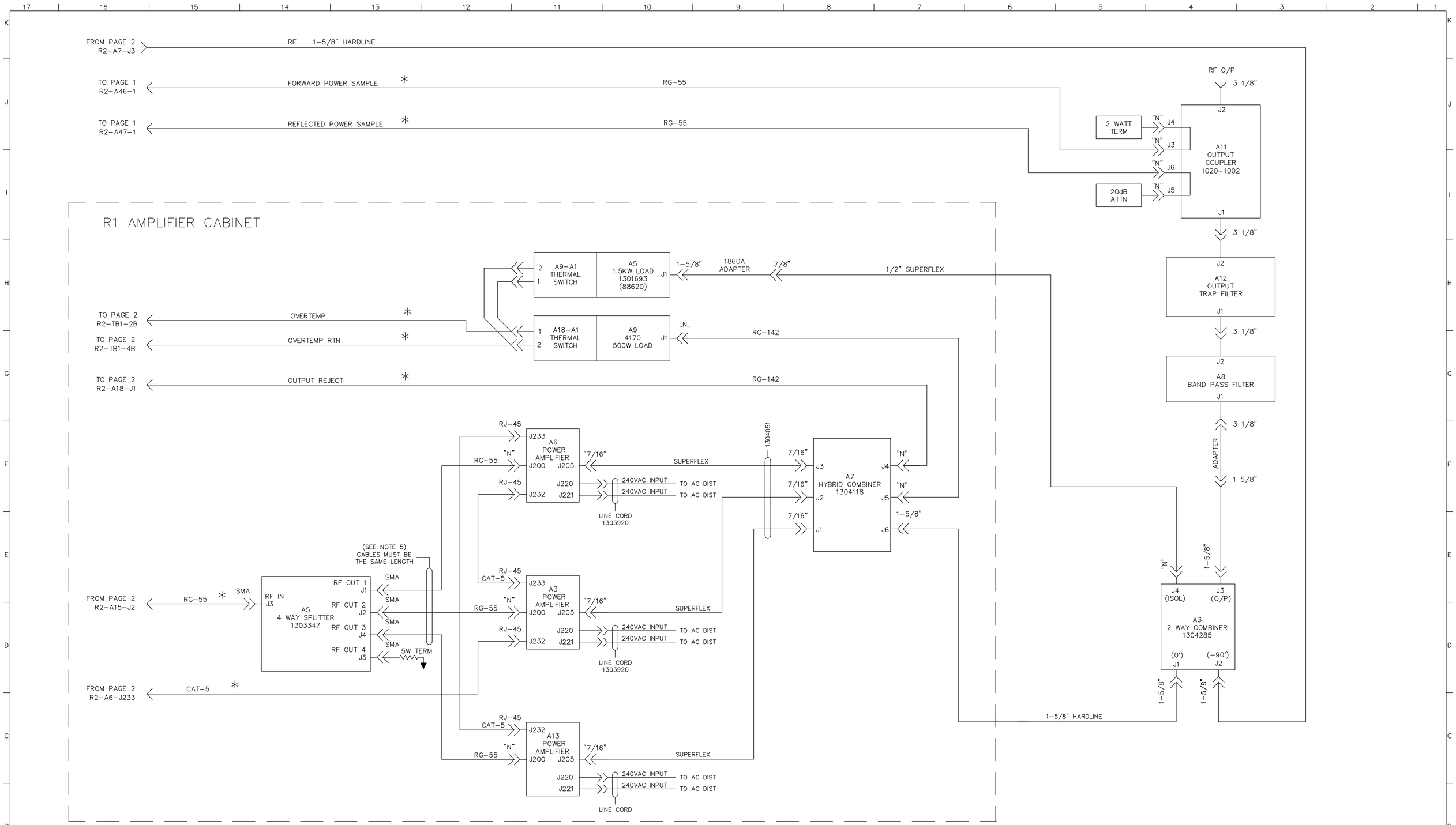

REV	ECO	DATE	APV

Axcera®

THIS PRINT IS THE PROPERTY OF AXCERA, IT SHALL NOT BE COPIED WITHOUT PERMISSION.

MATERIAL

FINISH

TITLE
I/C
5KW XMTR/XLTR,
DUAL EXC, LX

DWN	RGE	02/23/05	
CHK	JCM	03/03/05	
REL	JCM	03/03/05	D

DWG. NO. 1305741

REV A0

SCALE ---

SHEET 3 OF 3

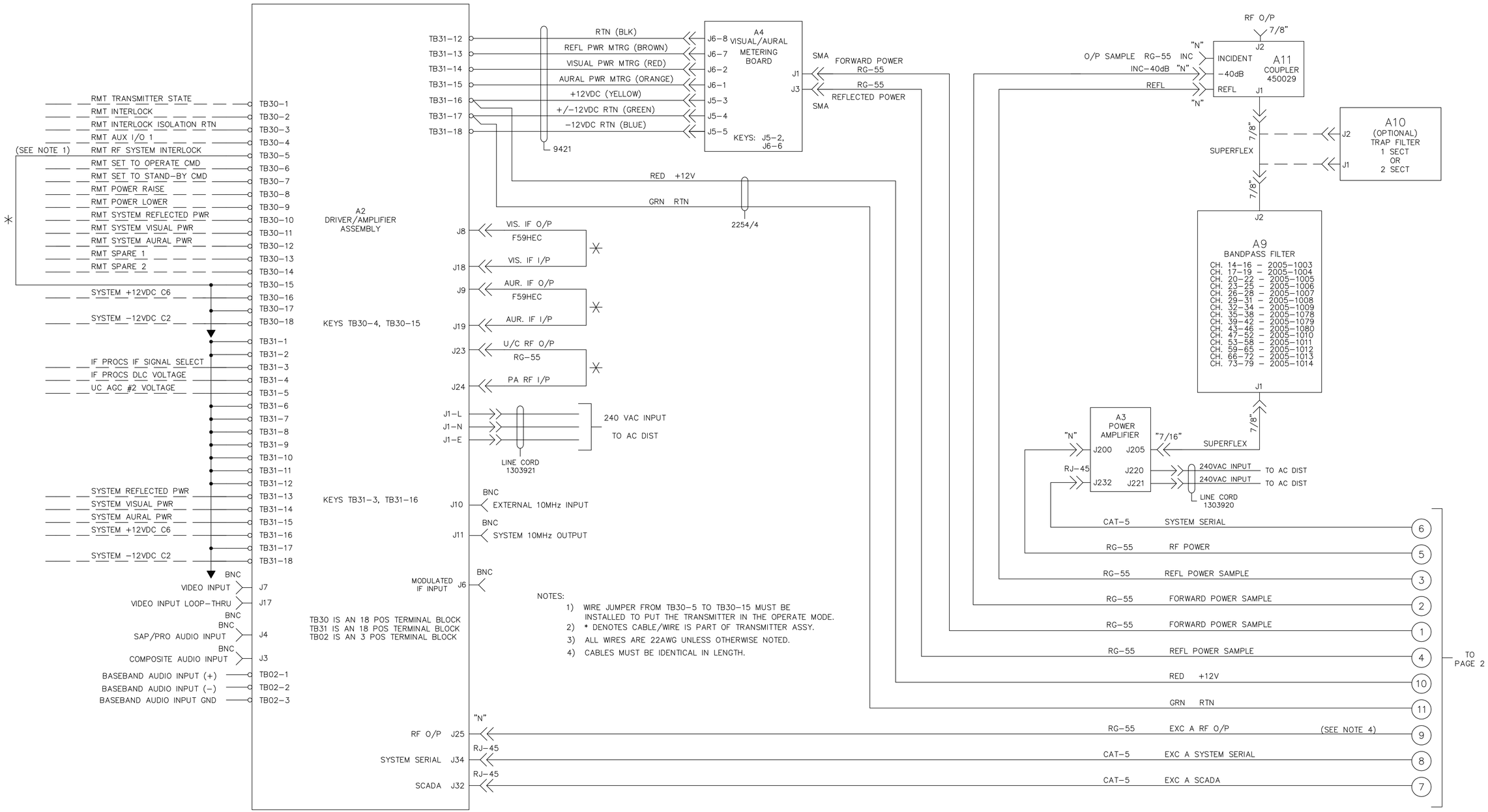

NOTES:

1) WIRE JUMPER FROM TB30-5 TO TB30-15 MUST BE INSTALLED TO PUT THE TRANSMITTER IN THE OPERATE MODE.
2) * DENOTES CABLE/WIRE IS PART OF TRANSMITTER ASSY.
3) ALL WIRES ARE 22AWG UNLESS OTHERWISE NOTED.
4) CABLES MUST BE IDENTICAL IN LENGTH.

REV	ECO	DATE	APV

Axcera®

THIS PRINT IS THE PROPERTY OF AXCERA, IT SHALL NOT BE COPIED WITHOUT PERMISSION.

MATERIAL -----

FINISH -----

TITLE I/C 500/1KW XMTR, DUAL EXCITER, LX

DWN	RGE	02/25/05	
CHK	JCM	03/03/05	
REL	JCM	03/03/05	

DWG. NO. 1305746 REV A0

D SCALE --- SHEET 1 OF 2

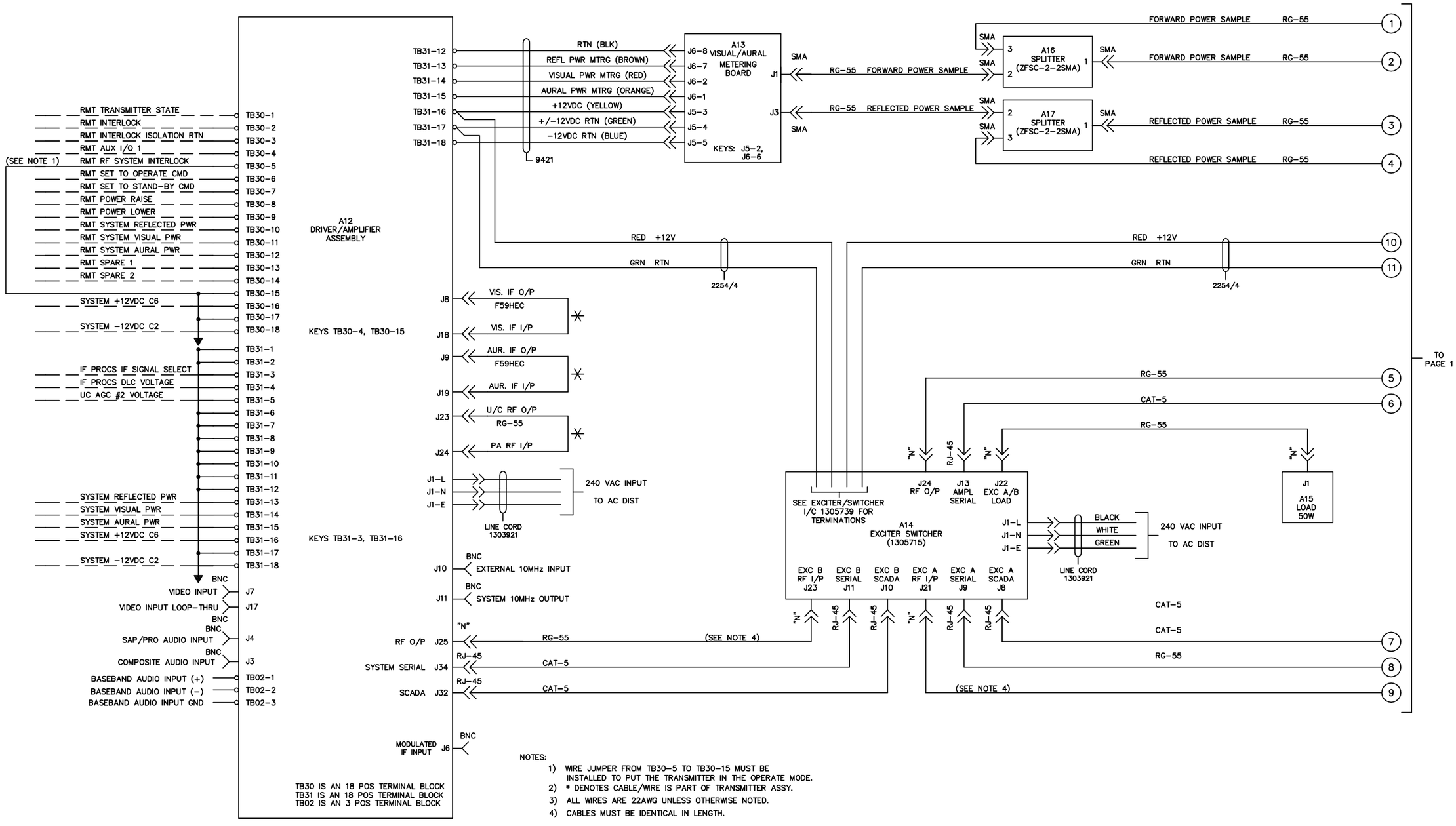

NOTES:

1) WIRE JUMPER FROM TB30-5 TO TB30-15 MUST BE INSTALLED TO PUT THE TRANSMITTER IN THE OPERATE MODE.
2) * DENOTES CABLE/WIRE IS PART OF TRANSMITTER ASSY.
3) ALL WIRES ARE 22AWG UNLESS OTHERWISE NOTED.
4) CABLES MUST BE IDENTICAL IN LENGTH.

REV	ECO	DATE	APV

Axcera.

THIS PRINT IS THE PROPERTY OF AXCERA, IT SHALL NOT BE COPIED WITHOUT PERMISSION.

MATERIAL ------

FINISH ------

TITLE I/C 500/1KW XMTR, DUAL EXCITER, LX

DWN	RGE	02/25/05	DWG. NO. 1305746
CHK	JCM	03/03/05	REV A0
REL	JCM	03/03/05	D SCALE --- SHEET 2 OF 2