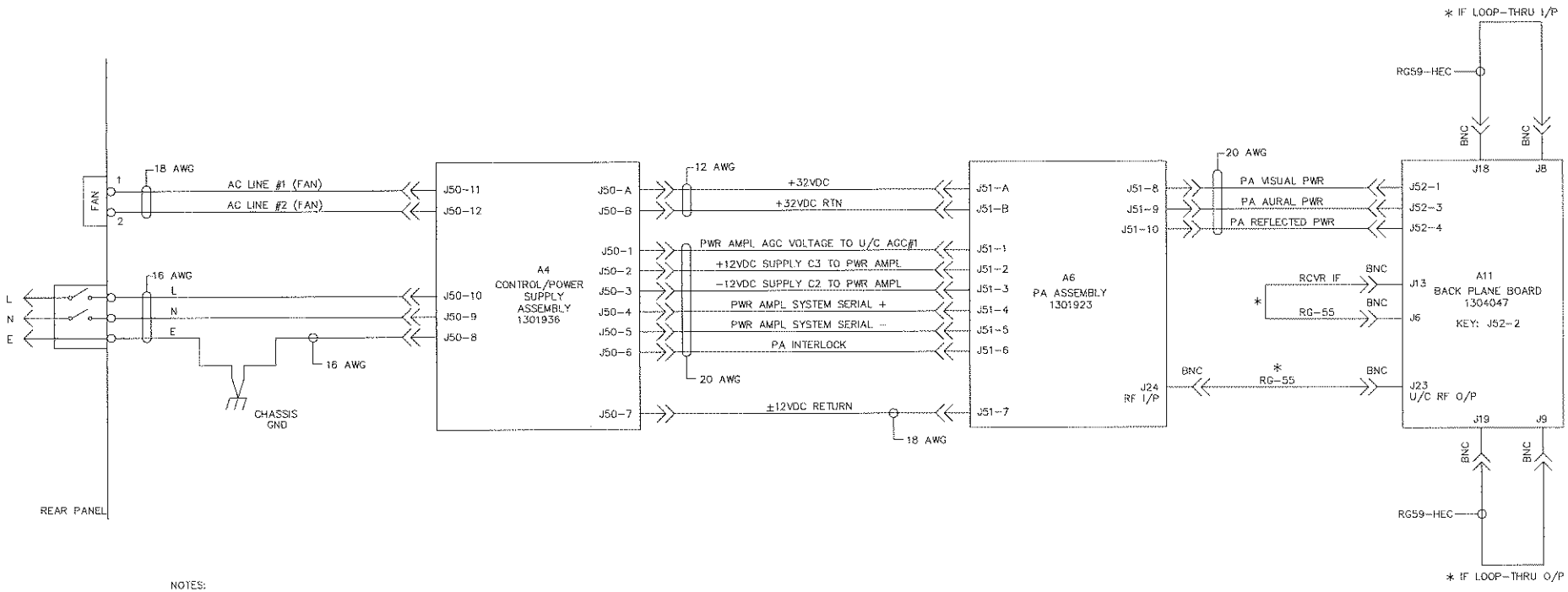

NOTES:

* INDICATES CABLE IS PART OF COAX ASSEMBLY.

REV	ECO	DATE	APV

Axcera

THIS PRINT IS THE PROPERTY OF AXCERA, IT SHALL NOT BE COPIED WITHOUT PERMISSION.

MATERIAL ——

FINISH ——

TITLE: I/C, CHASSIS ASSEMBLY INNOVATOR LX, V2

DWN	RGS	6/7/04	DWG. NO. 1304064	REV A0
CHK	JCM	6/18/04		
REL	JCM	6/18/04	D SCALE ---	SHEET 1 OF 1

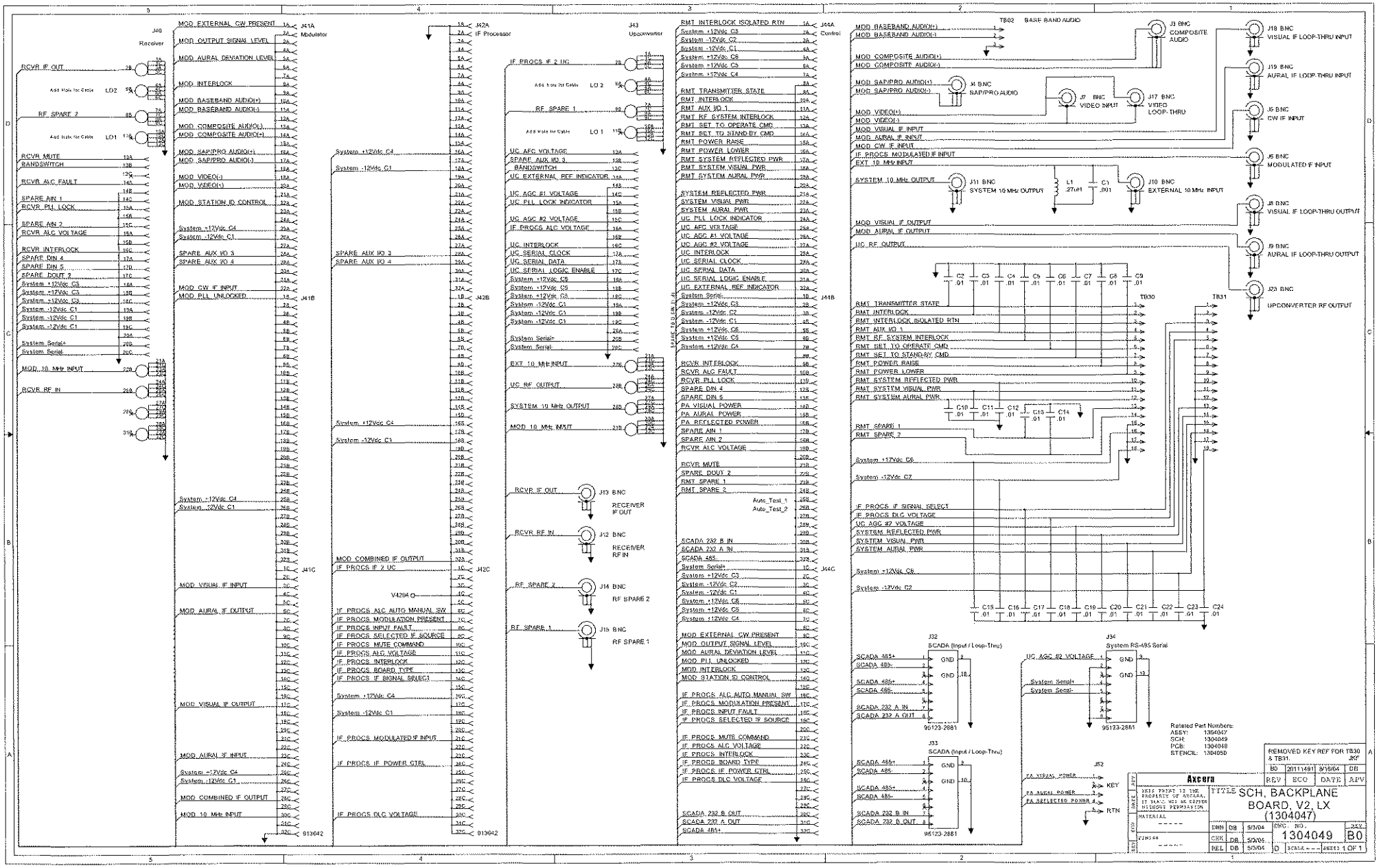
J40 Receiver
J41A Modulator
J42A IF Processor
J43 Upconverter
J44A Control
J41B
J42B
J44B
J41C
J42C
J44C
TB02 BASE BAND AUDIO
J3 BNC COMPOSITE AUDIO
J18 BNC VISUAL IF LOOP-THRU INPUT
J19 BNC AURAL IF LOOP-THRU INPUT
J6 BNC CW IF INPUT
J5 BNC MODULATED IF INPUT
J8 BNC VISUAL IF LOOP-THRU OUTPUT
J9 BNC AURAL IF LOOP-THRU OUTPUT
J23 BNC UPCONVERTER RF OUTPUT
J4 BNC SAP/PRO AUDIO
J7 BNC VIDEO INPUT
J17 BNC VIDEO LOOP-THRU
J11 BNC SYSTEM 10 MHz OUTPUT
J10 BNC EXTERNAL 10 MHz INPUT
L1 .27uH
C1 .001
TB30
TB31
J19 BNC RECEIVER IF OUT
J12 BNC RECEIVER RF IN
J14 BNC RF SPARE 2
J15 BNC RF SPARE 1
J32 SCADA (Input / Loop-Thru)
J33 SCADA (Input / Loop-Thru)
J34 System RS-485 Serial
J52
KEY
RTN
96123-2861
Related Part Numbers:
ASSY: 1304047
SCH: 1304049
PCB: 1304048
STENCIL: 1304050
REMOVED KEY REF FOR TB30 & TB31.
Axcera
SCH, BACKPLANE BOARD, V2, LX (1304047)
1304049
B0
SCALE ---
SHEET 1 OF 1

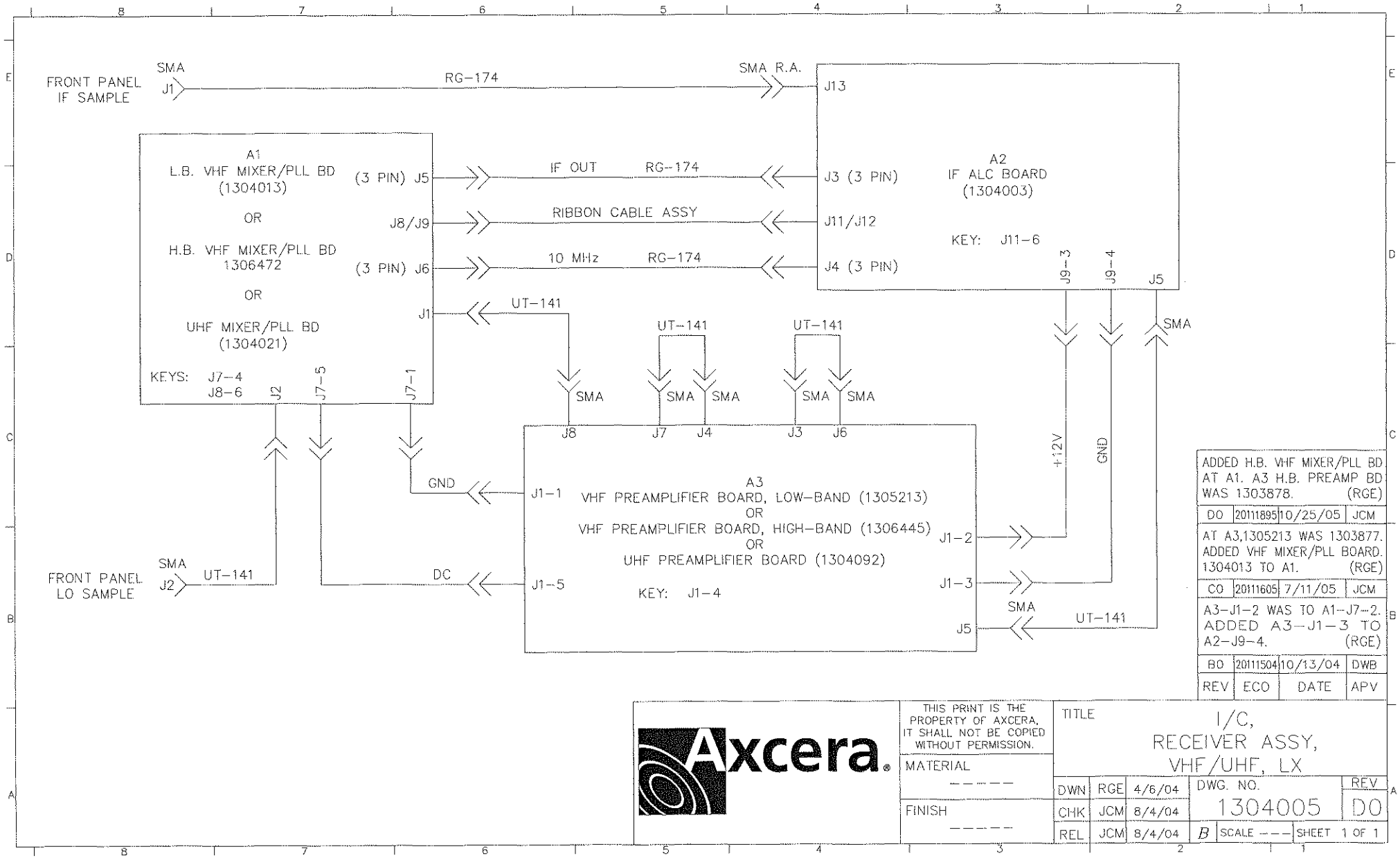

REV	ECO	DATE	APV
DO	20111895	10/25/05	JCM
CO	20111605	7/11/05	JCM
BO	20111504	10/13/04	DWB

ADDED H.B. VHF MIXER/PLL BD AT A1. A3 H.B. PREAMP BD WAS 1303878. (RGE)

AT A3,1305213 WAS 1303877. ADDED VHF MIXER/PLL BOARD. 1304013 TO A1. (RGE)

A3-J1-2 WAS TO A1-J7-2. ADDED A3-J1-3 TO A2-J9-4. (RGE)

Axcera®

THIS PRINT IS THE PROPERTY OF AXCERA, IT SHALL NOT BE COPIED WITHOUT PERMISSION.

MATERIAL ------

FINISH ------

TITLE I/C, RECEIVER ASSY, VHF/UHF, LX

DWN	RGE	4/6/04	DWG. NO. 1304005	REV DO
CHK	JCM	8/4/04		
REL	JCM	8/4/04	B SCALE ---	SHEET 1 OF 1

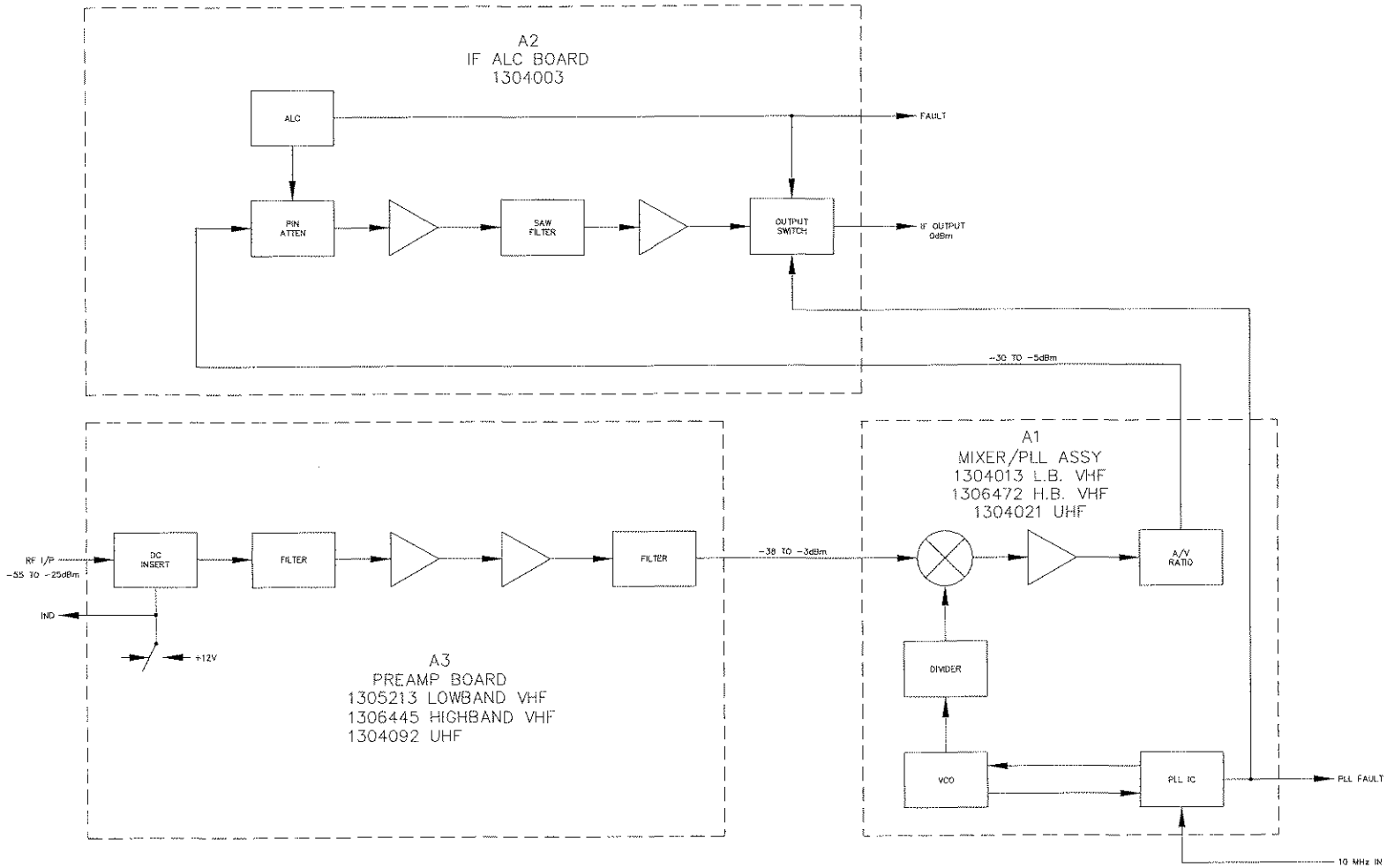

ADDED H.B. VHF MIXER/PLL BD AT A1. A3 H.B. PREAMP BD WAS 1303878. (RGE)			
C0	20111993	10/25/05	JCM
A3 LOWBAND VHF PRE-AMP BD WAS 1303877. (RGE)			
B0	20111823	7/5/05	LRT
REV	ECO	DATE	APV

Axcera.

THIS PRINT IS THE PROPERTY OF AXCERA, IT SHALL NOT BE COPIED WITHOUT PERMISSION.

MATERIAL ----

FINISH ----

TITLE B/D, RECEIVER ASSEMBLY, VHF/UHF LX

DWN	RGE	5/4/04
CHK	DWB	6/26/04
REL	DWB	6/26/04

DWG. NO. 1304004 REV C0

D SCALE --- SHEET 1 OF 1

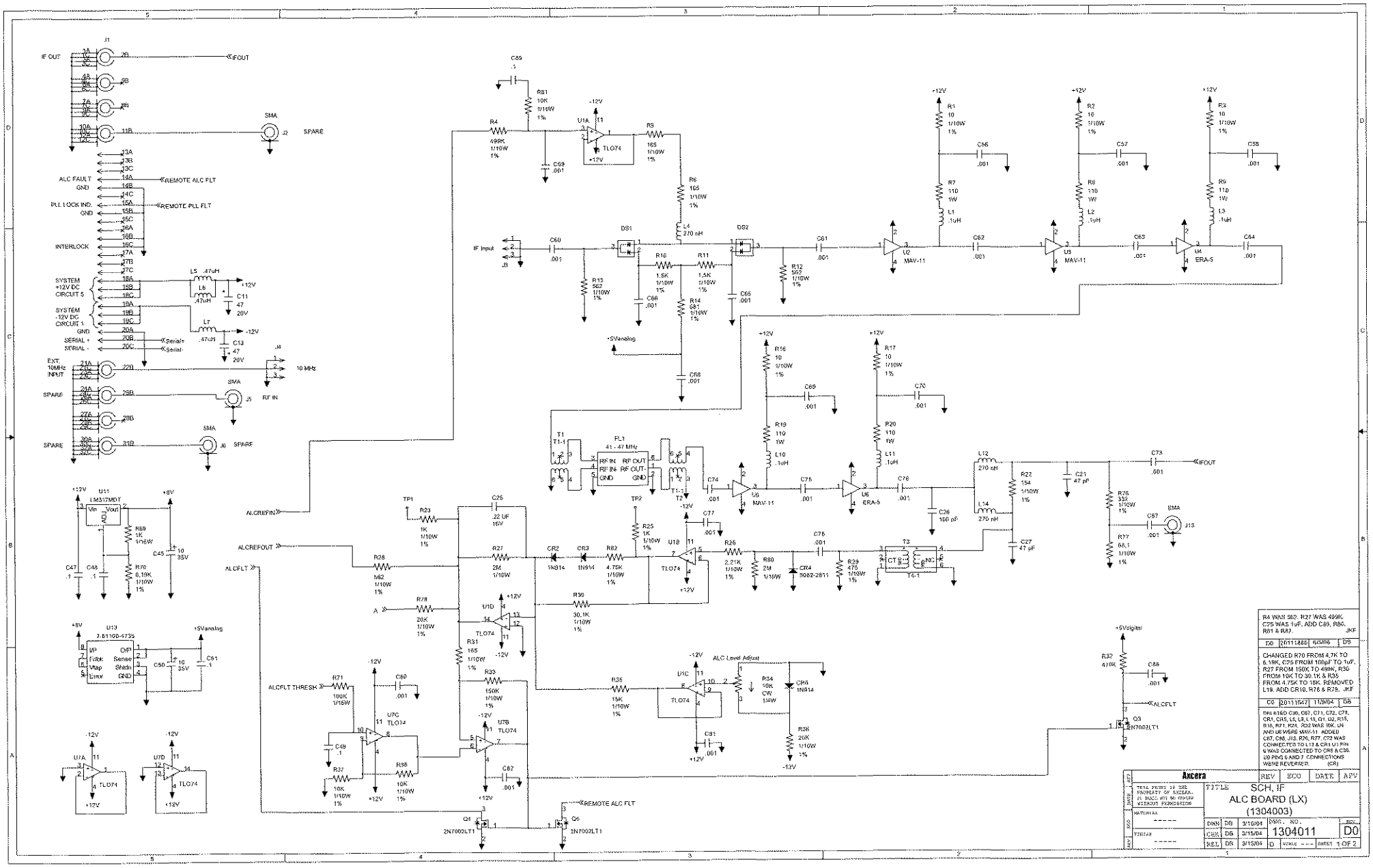
IF OUT
IFOUT
SPARE
ALC FAULT
GND
REMOTE ALC FLT
PLL LOCK IND.
REMOTE PLL FLT
INTERLOCK
SYSTEM +12V DC CIRCUIT 5
SYSTEM -12V DC CIRCUIT 1
SERIAL +
SERIAL -
EXT. 10MHz INPUT
10 MHz
RF IN
IF Input
FL1
41 - 47 MHz
MAV-11
ERA-5
ALCREFIN
ALCREFOUT
ALCFLT
ALCFLT THRESH
ALC Level Adjust
REMOTE ALC FLT
R4 WAS 562, R27 WAS 499K
C25 WAS 1uF, ADD C89, R80,
R81 & R87.
JKF
CHANGED R70 FROM 4.7K TO
6.19K, C75 FROM 100pF TO 1uF,
R27 FROM 150K TO 499K, R30
FROM 10K TO 30.1K & R35
FROM 4.75K TO 15K. REMOVED
L19. ADD CR10, R76 & R78. JKF
ADDED C30, C67, C71, C72, C78,
CR1, CR9, L5, L9, L13, Q1, Q2, R15,
R16, R21, R24. R32 WAS 10K. U4
AND U6 WERE MAV-11. ADDED
C87, C88, J13, R76, R77. C72 WAS
CONNECTED TO L13 & CR1 U1 PIN
9 WAS CONNECTED TO CR6 & C38.
U9 PINS 6 AND 7 CONNECTIONS
WERE REVERSED. (CR)
Axcera
SCH, IF
ALC BOARD (LX)
(1304003)
1304011
D0
1 OF 2

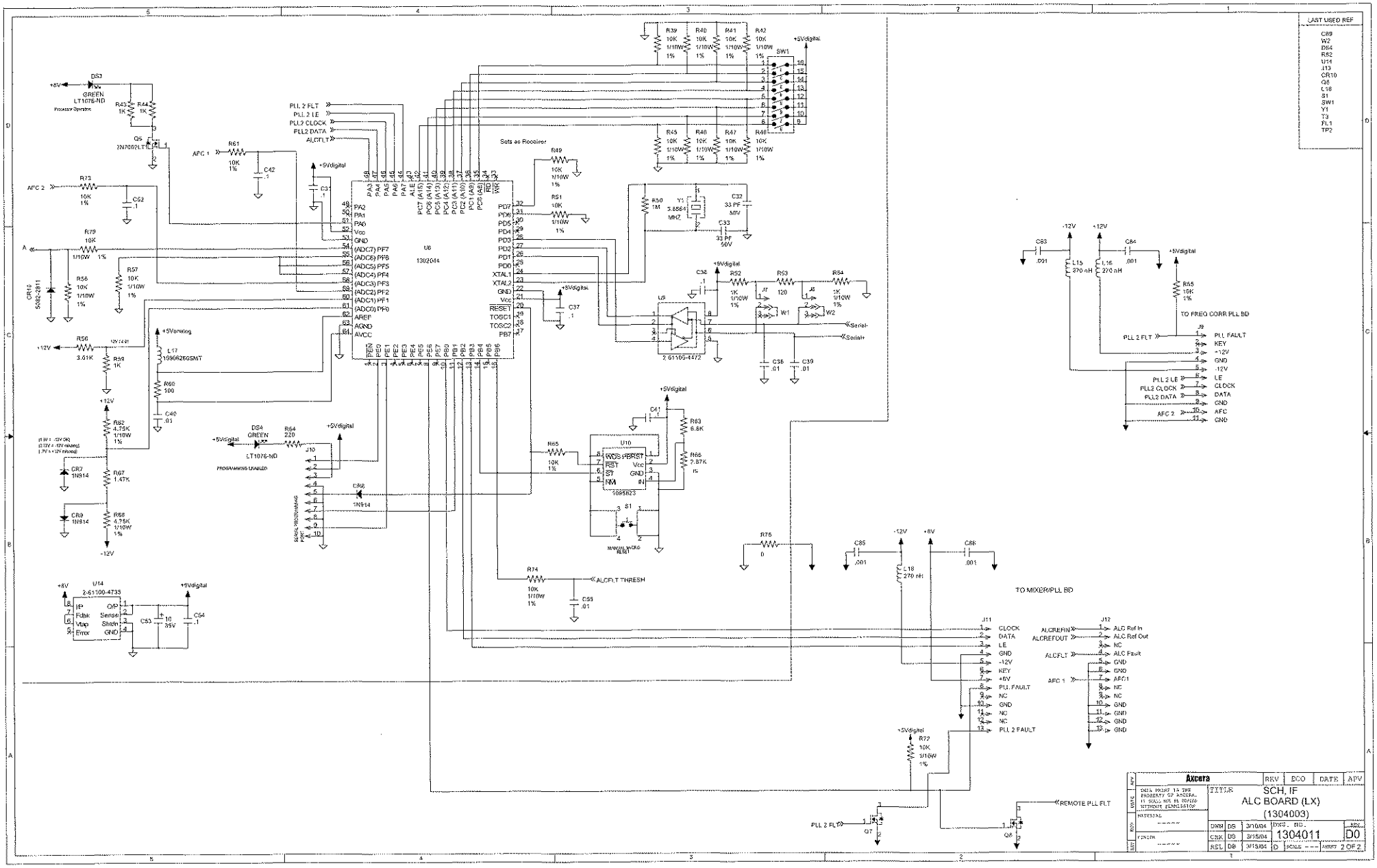
LAST USED REF
C89
W2
DS4
R52
U14
J13
CR10
Q6
L18
S1
SW1
Y1
T3
FL1
TP2
Axcera
SCH, IF
ALC BOARD (LX)
(1304003)
1304011
D0
2 OF 2
TO FREQ CORR PLL BD
TO MIXER/PLL BD
PLL FAULT
PLL 2 FAULT
REMOTE PLL FLT
ALCREFIN
ALCREFOUT
ALCFLT
AFC 1
AFC 2
ALCFLT THRESH
Serial-
Serial+
Sets as Receiver
PROGRAMMING DISABLED
MANUAL MODE RESET
Processor Operation
U6
1302044
U8
2-61105-4472
U10
1085823
U14
2-61100-4735
L17
19906266SMT
L15
270 nH
L16
270 nH
L18
270 nH
Y1
5.8864 MHZ
SW1
R39
R40
R41
R42
R45
R46
R47
R48
R49
R51
R50
1M
R52
R53
R54
R55
10K
R56
3.01K
R57
10K
R58
1K
R59
1K
R60
100
R61
10K
R62
4.75K
R63
6.8K
R64
220
R65
2.87K
R66
4.75K
R67
1.47K
R68
4.75K
R69
10K
R70
10K
R71
10K
R72
10K
R73
10K
R74
10K
R75
0
R76
10K
R77
10K
C32
33 PF
50V
C33
33 PF
50V
C37
.1
C38
.1
C39
.01
C40
.01
C41
C42
C52
.1
C53
10
35V
C54
.1
C55
.01
C63
.001
C64
.001
C65
.001
C66
.001
C85
.001
J9
J10
J11
J12
CLOCK
DATA
LE
GND
-12V
KEY
+6V
PLL FAULT
NC
PLL 2 FAULT
ALC Ref In
ALC Ref Out
ALC Fault
AFC1
DS3
GREEN
LT1076-ND
DS4
GREEN
LT1076-ND
CR7
1N914
CR8
1N914
CR9
1N914
CR10
5082-2811
Q5
2N7002LT1
Q6
Q7
+5Vdigital
+5Vanalog
+12V
-12V
+6V
PLL 2 FLT
PLL 2 LE
PLL2 CLOCK
PLL2 DATA
AFC 1
AFC 2
ALCFLT
PLL 2 FLT
REMOTE PLL FLT

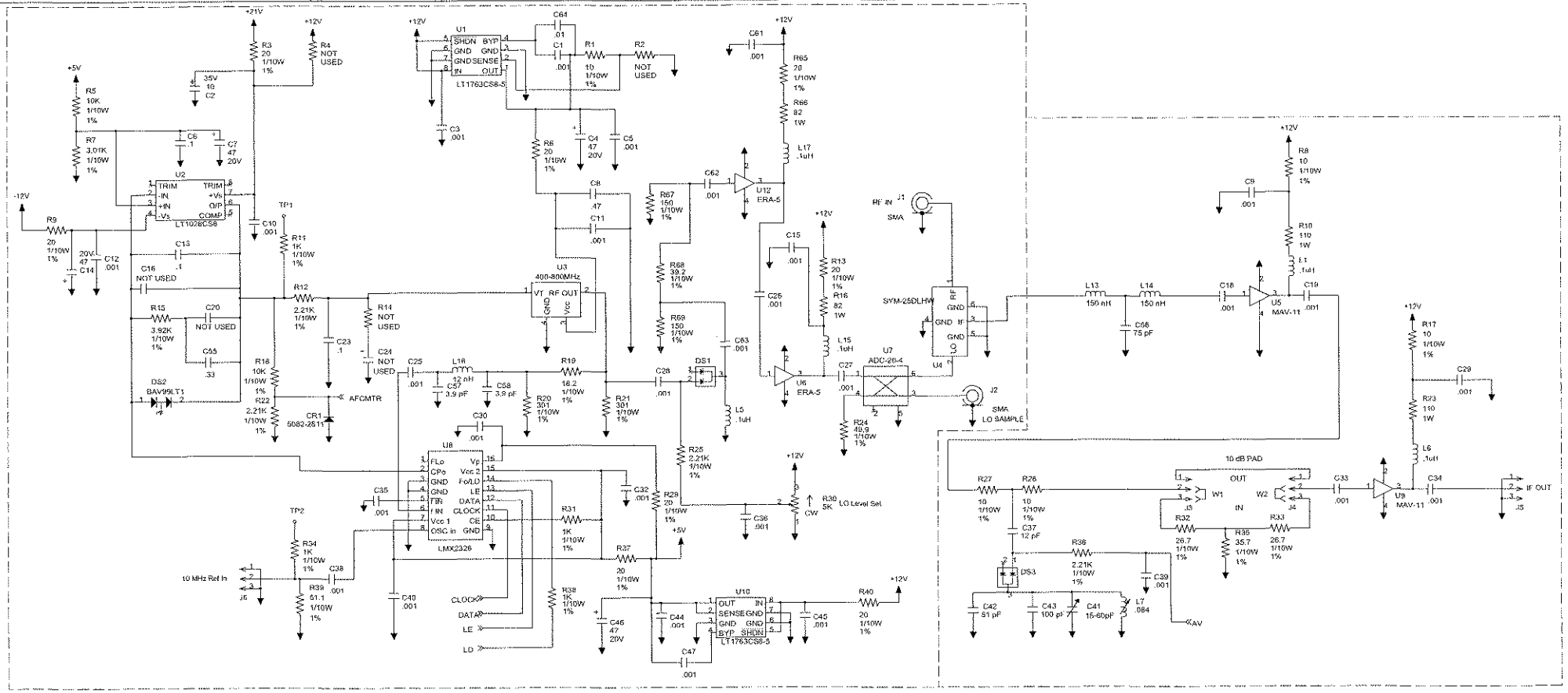

NOTE:

1) ALL RESISTORS ARE 1/8W UNLESS OTHERWISE NOTED.
2) ALL CAPACITORS ARE IN uF UNLESS OTHERWISE NOTED.
3) ALL INDUCTORS ARE IN uH UNLESS OTHERWISE NOTED.
4) Bd Material 30 mil FR4

ADDED NOTE "NOT USED" AT C16, C20. R12 WAS 1K, R16 WAS 3.01K, C55 WAS 0.33UF. U2 WAS AD797BR. C13 & C23 WERE SURFACE MOUNT. ADDED C61, C62, C63, L17, R65 THRU R69, D12. D15 WAS CONNECTED TO +12V. (CR)

C0	20111504	09/28/04	DB

DELETED R26, C17, C21, C22, C51, L2, L3, L4. ADDED NOTE "NOT USED" AT R2, R14, C24. R3 WAS 249 OHM, R13 WAS 82 OHM, R15 WAS 18 OHM, C6 & C51 WERE 0.1UF, C20 WAS 10UF, U1 & U10 WERE LT1763CS8, U3 WAS ROS-1800 (1000-1800 MHz), L9 WAS 15 UH. ADDED C36 THRU C60, L13 THRU L16, R64. REWIRED SW1. (CR)

B0	20111456	07/16/04	DB

REV	ECO	DATE	APV
R62 & R63 WERE 2.21K. ADDED C64.	EO 20111064	12/20/05	DB
R43 WAS 150K	DN 20111327	11/08/04	DB

Axcera

THIS DESIGN IS THE PROPERTY OF AXCERA. IT SHALL NOT BE COPIED WITHOUT PERMISSION

MATERIAL ------

FINISH ------

TITLE SCH, UHF MIXER PLL BOARD (1304021)

DRN	DB	2/27/04	DWG. NO. 1304023
CHK	DB	2/27/04	REV. E0
REL	DB	2/27/04	D SCALE ---- SHEET 1 OF 2

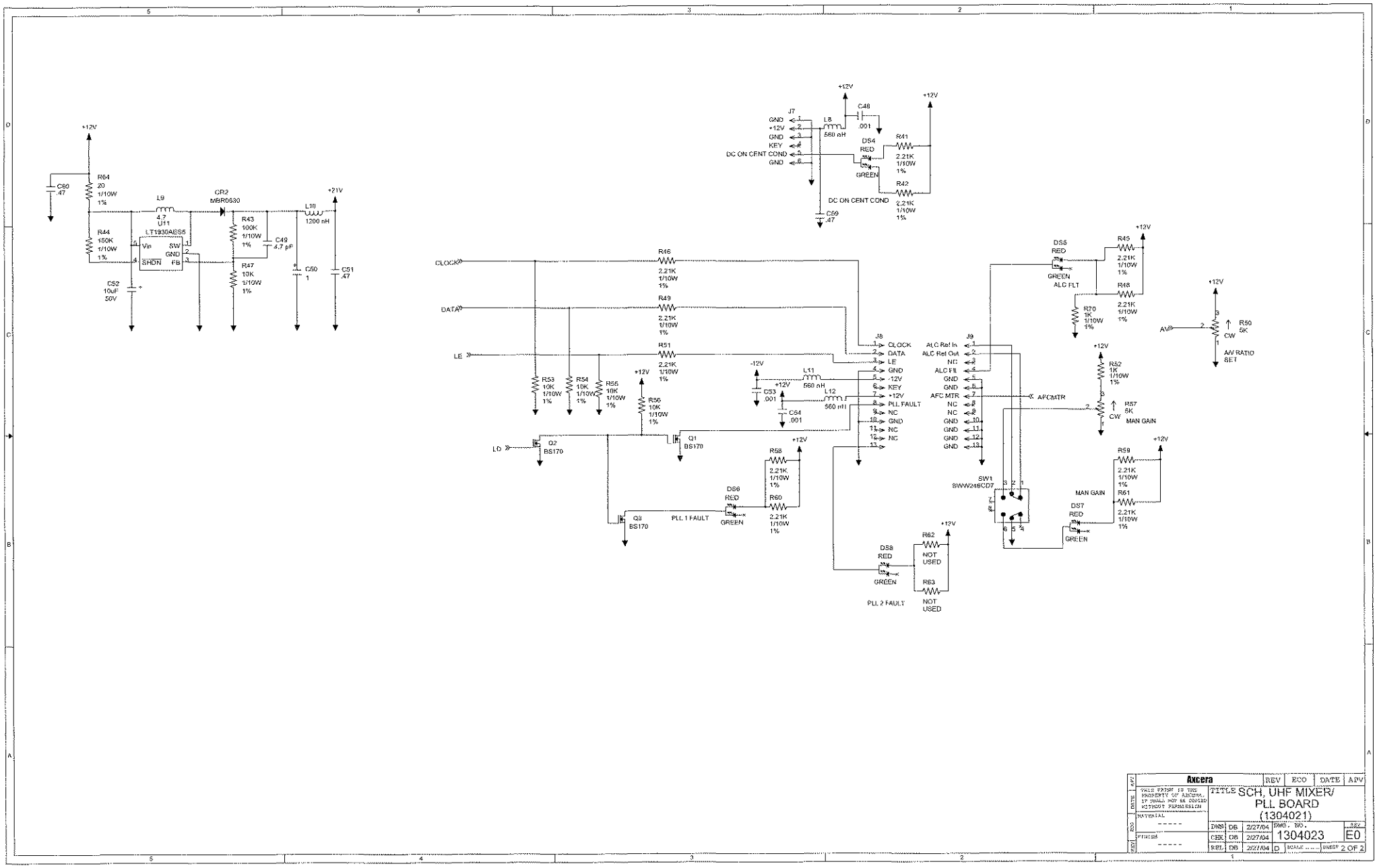
+12V
C60 .47
R64 20 1/10W 1%
L9 4.7
U11 LT1930ES5
Vin
SW
GND
SHDN
FB
R44 150K 1/10W 1%
C52 10uF 56V
CR2 MBR0530
R43 100K 1/10W 1%
C49 4.7 pF
R47 10K 1/10W 1%
L10 1200 nH
C50 1
+21V
C51 .47
J7
GND
+12V
GND
KEY
DC ON CENT COND
GND
L8 560 nH
C48 .001
DS4 RED GREEN
R41 2.21K 1/10W 1%
R42 2.21K 1/10W 1%
DC ON CENT COND
C59 .47
CLOCK
DATA
LE
LD
R46 2.21K 1/10W 1%
R49 2.21K 1/10W 1%
R51 2.21K 1/10W 1%
R53 10K 1/10W 1%
R54 10K 1/10W 1%
R55 10K 1/10W 1%
R56 10K 1/10W 1%
Q2 BS170
Q1 BS170
Q3 BS170
-12V
C53 .001
C54 .001
L11 560 nH
L12 560 nH
J8
CLOCK
DATA
LE
GND
-12V
KEY
+12V
PLL FAULT
NC
GND
NC
NC
R58 2.21K 1/10W 1%
R60 2.21K 1/10W 1%
DS6 RED GREEN
PLL 1 FAULT
DS8 RED GREEN
PLL 2 FAULT
R62 NOT USED
R63 NOT USED
J9
ALC Ref In
ALC Ref Out
NC
ALC FIL
GND
GND
AFC MTR
NC
NC
GND
GND
GND
GND
AFCMTR
SW1 SWW246CD7
DS5 RED GREEN
ALC FLT
R45 2.21K 1/10W 1%
R48 2.21K 1/10W 1%
R70 1K 1/10W 1%
R52 1K 1/10W 1%
R57 5K CW
MAN GAIN
R59 2.21K 1/10W 1%
R61 2.21K 1/10W 1%
DS7 RED GREEN
AV
R50 5K CW
AV RATIO SET
Axcera
REV
ECO
DATE
APV
THIS PAPER IS THE PROPERTY OF AXCERA, IT SHALL NOT BE COPIED WITHOUT PERMISSION
TITLE SCH, UHF MIXER/ PLL BOARD (1304021)
MATERIAL
FINISH
DWN DB 2/27/04
CHK DB 2/27/04
REL DB 2/27/04
DWG. NO. 1304023
REV E0
SCALE
SHEET 2 OF 2

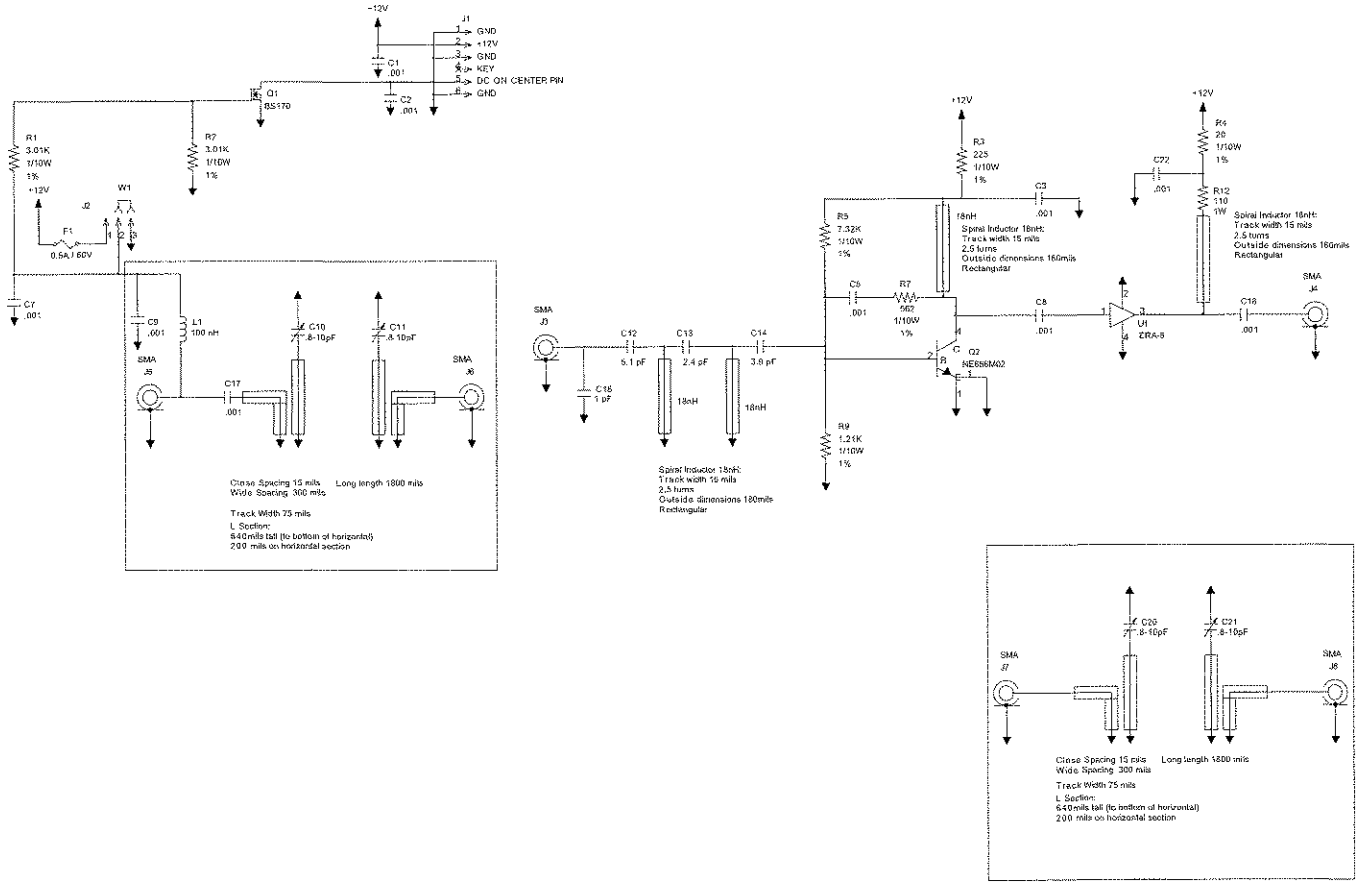

Notes:
BD Material is TLX-8 60 mils

REV	ECO	DATE	APV
C0	20111574	11/10/04	LRF

MOVED W1 FROM J2 1-2 TO J2 2-3. JKF

DELETED C4, C5, C13, C16, C3, R8, R9, R10, R11. C15 WAS 3.9 PF, PA WAS 225 OHM. ADDED C22, F1, R12, U1. SPIRAL INDUCTOR 18 NH WAS CONNECTED FROM C15 TO GND "LONG LENGTH" NOTE WAS 1800 MILS. L SECTION NOTE WAS 740 MILS TALL (TO BOTTOM OF HORIZONTAL. (CR)

REV	ECO	DATE	APV
B0	20111460	07/20/04	DB

Axcera

THIS DRAWING IS THE PROPERTY OF AXCERA, IT SHALL NOT BE COPIED WITHOUT PERMISSION

MATERIAL ----

FINISH ----

TITLE SCHEMATIC, UHF PREAMPLIFIER (1304092)

DRN	DB	2/10/04	DWG. NO. 1304091 REV C0
CHK	DB	2/26/04	
REL	DB	2/26/04	D SCALE --- SHEET 1 OF 1

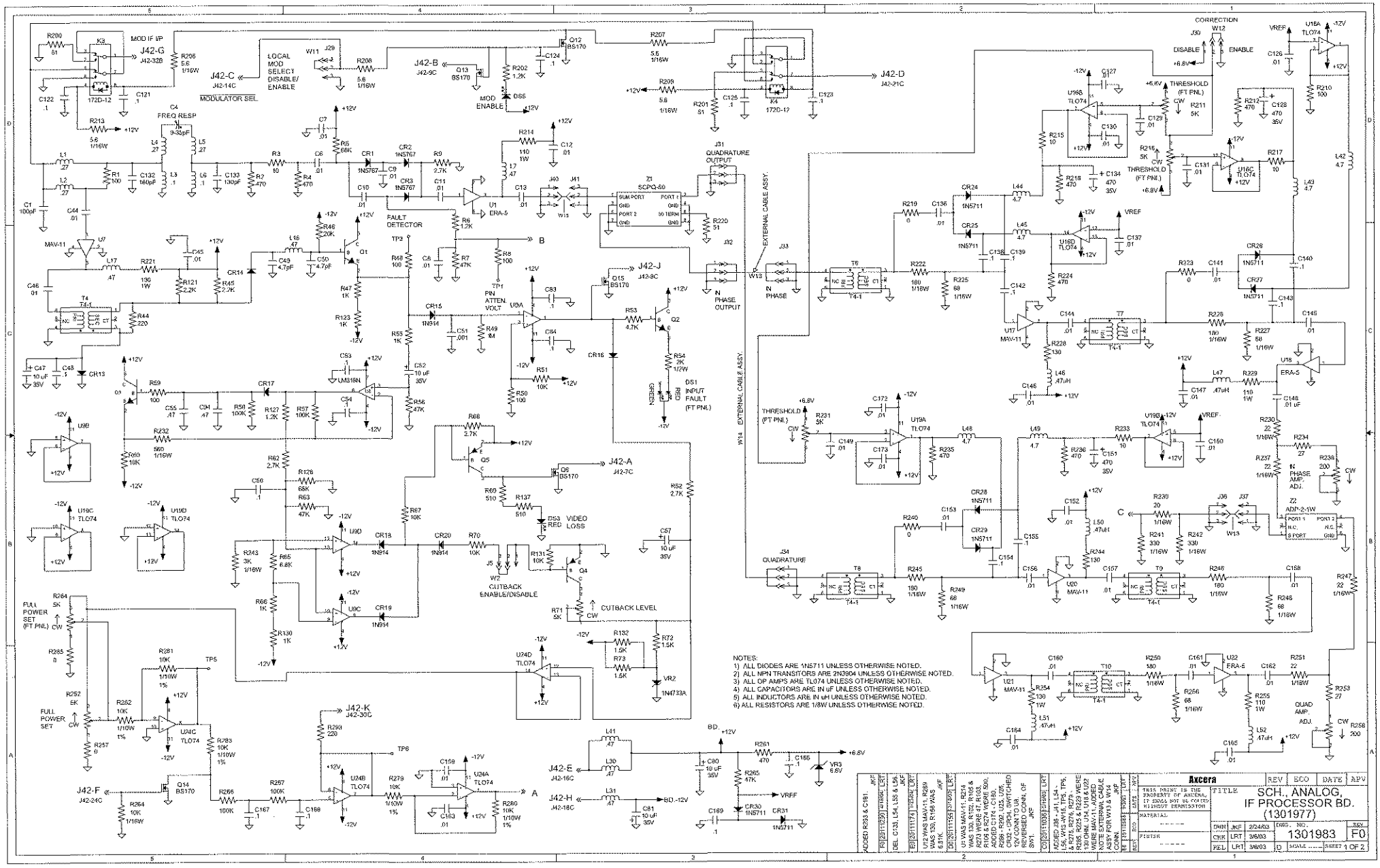
MOD IF I/P
J42-G
J42-32B
J42-C
J42-14C
LOCAL MOD SELECT DISABLE/ ENABLE
MODULATOR SEL.
J42-B
J42-9C
MOD ENABLE
J42-D
J42-21C
FREQ RESP
FAULT DETECTOR
PIN ATTEN. VOLT
QUADRATURE OUTPUT
EXTERNAL CABLE ASSY.
IN PHASE OUTPUT
IN PHASE
CORRECTION
DISABLE
ENABLE
THRESHOLD (FT PNL)
J42-J
J42-8C
J42-A
J42-7C
INPUT FAULT (FT PNL)
VIDEO LOSS
CUTBACK ENABLE/DISABLE
CUTBACK LEVEL
FULL POWER SET (FT PNL)
FULL POWER SET
J42-K
J42-30C
J42-E
J42-16C
J42-H
J42-18C
J42-F
J42-24C
QUADRATURE
IN PHASE AMP. ADJ.
QUAD AMP. ADJ.
NOTES:
1) ALL DIODES ARE 1N5711 UNLESS OTHERWISE NOTED.
2) ALL NPN TRANSITORS ARE 2N3904 UNLESS OTHERWISE NOTED.
3) ALL OP AMPS ARE TL074 UNLESS OTHERWISE NOTED.
4) ALL CAPACITORS ARE IN uF UNLESS OTHERWISE NOTED.
5) ALL INDUCTORS ARE IN uH UNLESS OTHERWISE NOTED.
6) ALL RESISTORS ARE 1/8W UNLESS OTHERWISE NOTED.
Axcera
THIS PRINT IS THE PROPERTY OF AXCERA, IT SHALL NOT BE COPIED WITHOUT PERMISSION
SCH., ANALOG, IF PROCESSOR BD. (1301977)
1301983
F0
SHEET 1 OF 2

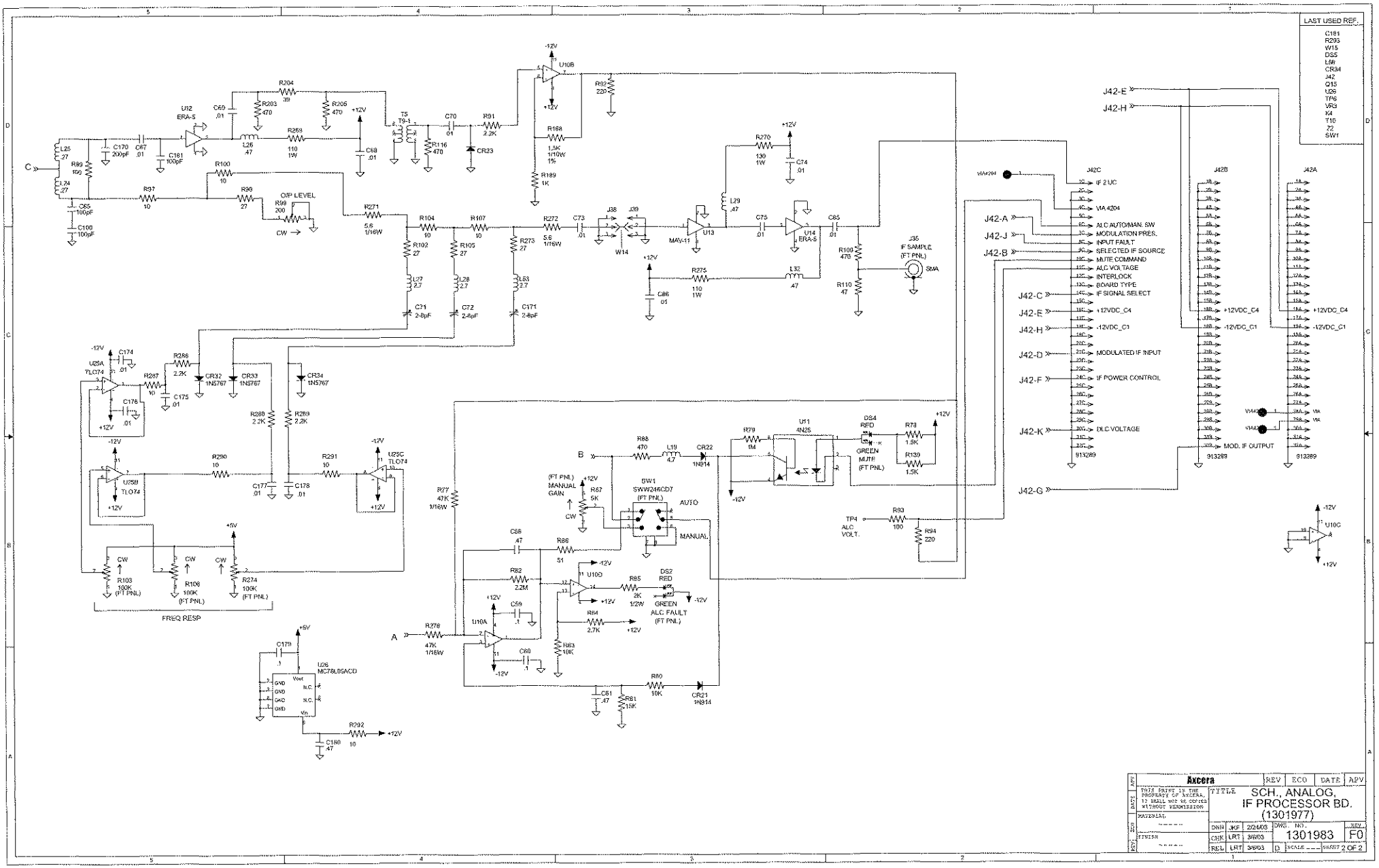
LAST USED REF.
C181
R293
W15
DS5
L56
CR34
J42
Q15
U26
TP6
VR3
K4
T10
Z2
SW1
J42-E
J42-H
J42-A
J42-J
J42-B
J42-C
J42-E
J42-H
J42-D
J42-F
J42-K
J42-G
J42C
J42B
J42A
IF 2 UC
VIA 4204
ALC AUTOMAN. SW
MODULATION PRES.
INPUT FAULT
SELECTED IF SOURCE
MUTE COMMAND
ALC VOLTAGE
INTERLOCK
BOARD TYPE
IF SIGNAL SELECT
+12VDC_C4
-12VDC_C1
MODULATED IF INPUT
IF POWER CONTROL
DLC VOLTAGE
MOD. IF OUTPUT
913289
J35
IF SAMPLE
(FT PNL)
SMA
O/P LEVEL
R99
200
CW
FREQ RESP
R103
100K
(FT PNL)
R108
100K
(FT PNL)
R274
100K
(FT PNL)
(FT PNL)
MANUAL
GAIN
R67
5K
SW1
SWW246CD7
(FT PNL)
AUTO
MANUAL
DS4
RED
GREEN
MUTE
(FT PNL)
DS2
RED
GREEN
ALC FAULT
(FT PNL)
TP4
ALC
VOLT.
U26
MC78L05ACD
Axcera
TITLE
SCH., ANALOG,
IF PROCESSOR BD.
(1301977)
DWG. NO.
1301983
REV
F0
SCALE
SHEET 2 OF 2

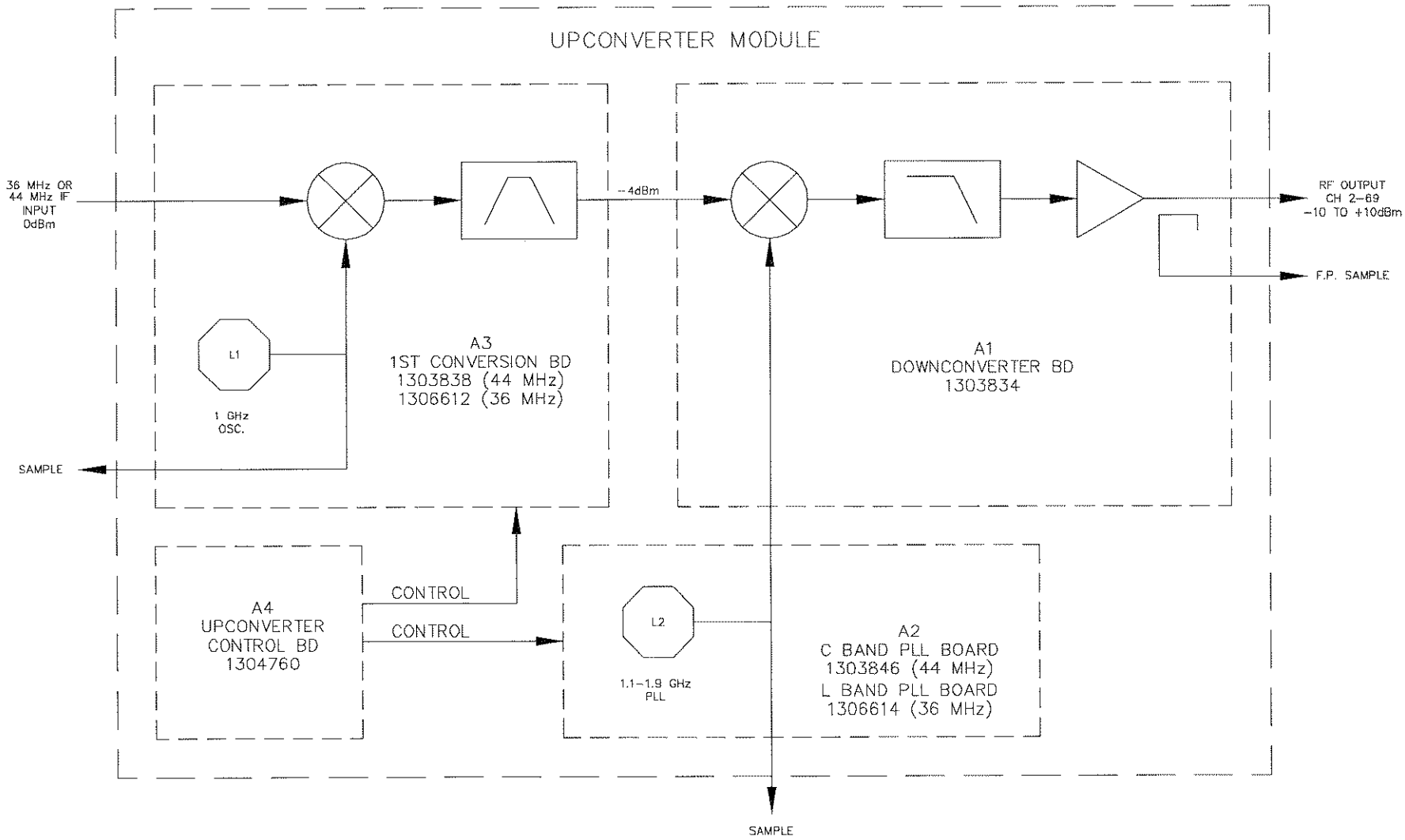

REV	ECO	DATE	APV

Axcera.

THIS PRINT IS THE PROPERTY OF AXCERA. IT SHALL NOT BE COPIED WITHOUT PERMISSION.

MATERIAL ------

FINISH ------

TITLE B/D, U/C ASSEMBLY, VHF/UHF LX

DWN	RGE	5/7/04	DWG. NO. 1303830	REV A0
CHK	DWB	9/30/04		
REL	DWB	9/30/04	C SCALE ----	SHEET 1 OF 1

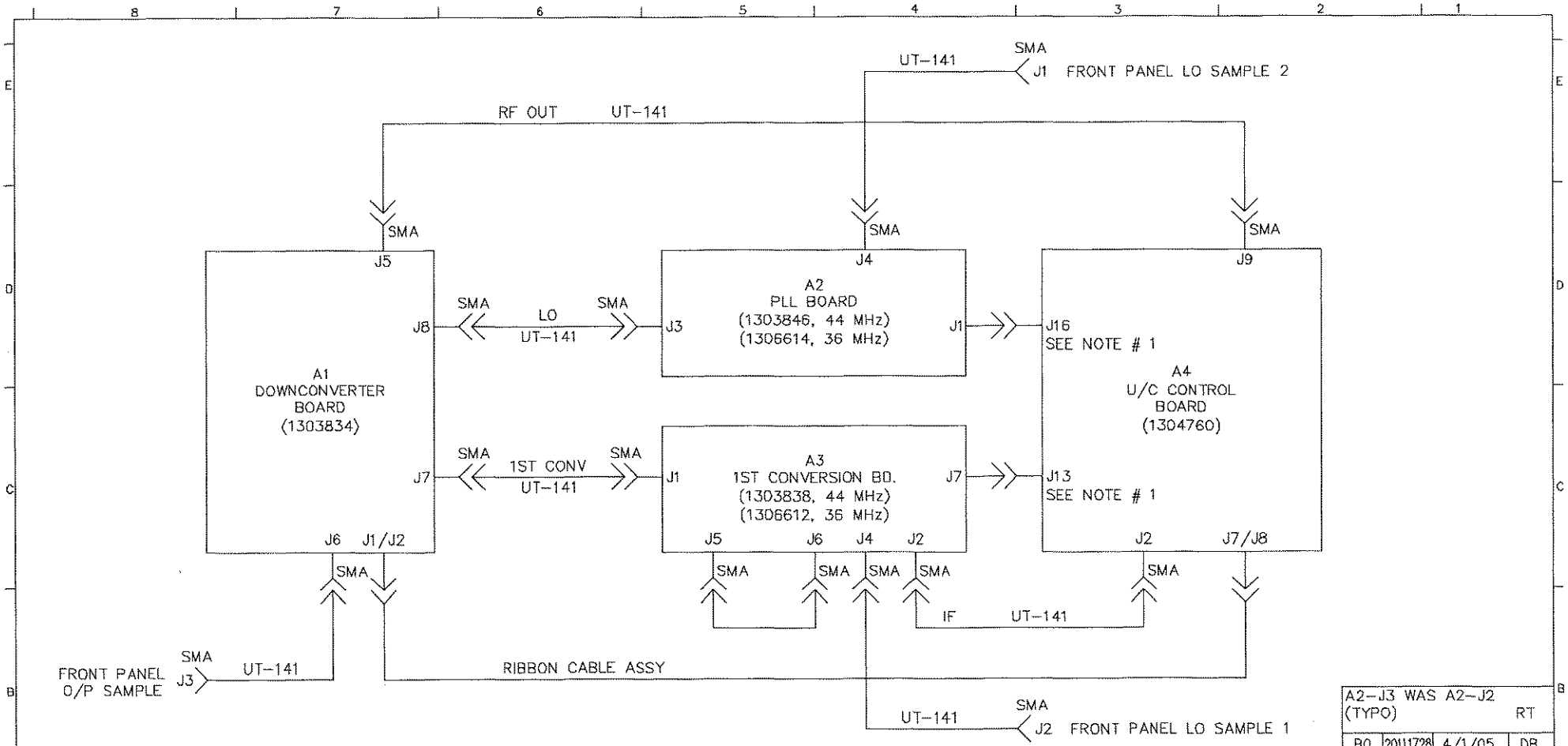

NOTES:
1. CONNECTORS ARE BOARD TO BOARD AND NOT PART OF THE HARNESS.

A2-J3 WAS A2-J2 (TYPO)			RT
B0	20111728	4/1/05	DB
REV	ECO	DATE	APV

Axcera.

THIS PRINT IS THE PROPERTY OF AXCERA, IT SHALL NOT BE COPIED WITHOUT PERMISSION.

MATERIAL ------

FINISH ------

TITLE I/C, UPCONVERTER ASSY, VHF/UHF, LX

DWN	RGE	04/06/04	DWG. NO. 1303831	REV B0
CHK	DWB	9/30/04		
REL	DWB	9/30/04	B SCALE ---	SHEET 1 OF 1

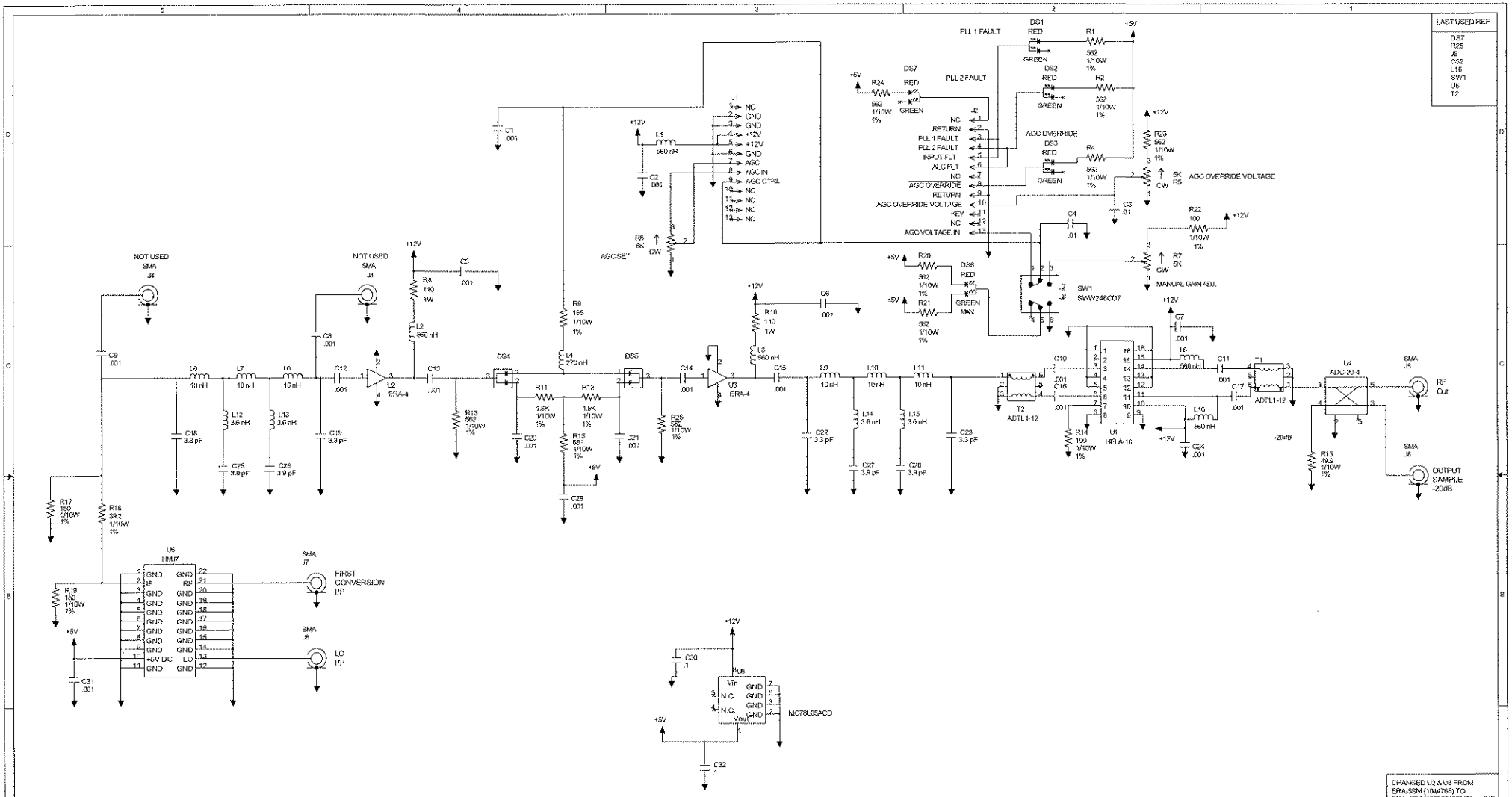

NOTE:
1) ALL RESISTORS ARE 1/8W UNLESS OTHERWISE NOTED.
2) ALL CAPACITORS ARE IN uF UNLESS OTHERWISE NOTED.
3) ALL INDUCTORS ARE IN uH UNLESS OTHERWISE NOTED.

REV	ECO	DATE	APV
C0	20111572	11/8/04	DB
B0	20111535	10/4/04	DB

CHANGED U2 & U3 FROM ERA-5SM (1004765) TO ERA-4SM (15900349SMT). JKF

ADDED R25, CHANGED CONN. TO SW1. R22 WAS 562. JKF

Axcera

THIS DOCUMENT IS THE PROPERTY OF AXCERA, IT SHALL NOT BE COPIED WITHOUT PERMISSION

MATERIAL ------

FINISH ------

TITLE PCB, DOWNCONVERTER BD. (1303834)

DRN	JKF	2/20/04	
CHK	DB	2/26/04	
REL	DB	2/26/04	D

DWG. NO. 1303836 REV C0

SCALE --- SHEET 1 OF 1

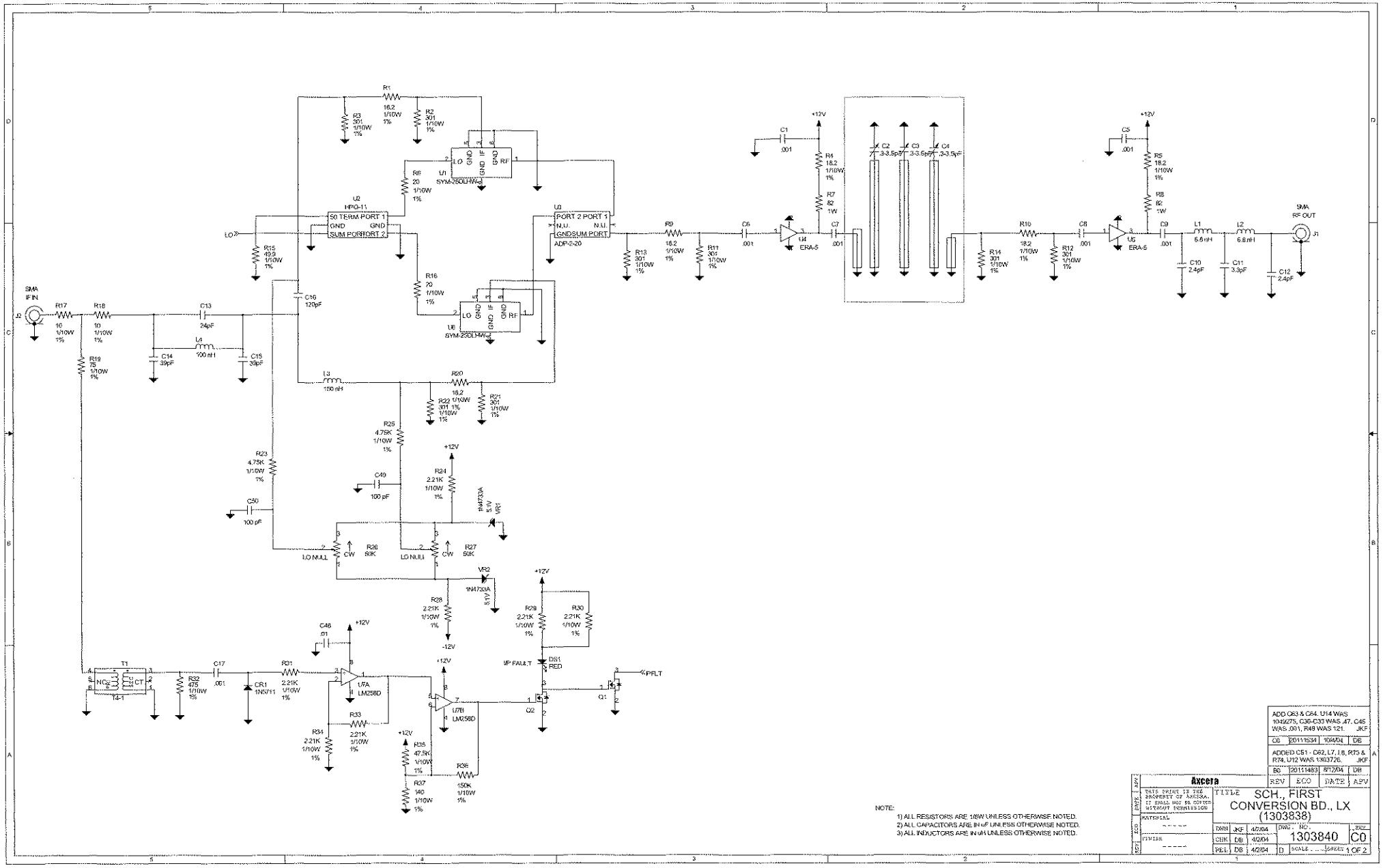

NOTE:
1) ALL RESISTORS ARE 1/8W UNLESS OTHERWISE NOTED.
2) ALL CAPACITORS ARE IN uF UNLESS OTHERWISE NOTED.
3) ALL INDUCTORS ARE IN uH UNLESS OTHERWISE NOTED.

REV	ECO	DATE	APV
C0	20111534	10/4/04	DB
B0	20111483	8/12/04	DB

ADD C63 & C64, U14 WAS 1049275, C30-C33 WAS .47, C45 WAS .001, R49 WAS 121. JKF

ADDED C51 - C62, L7, L8, R73 & R74, U12 WAS 1303726. JKF

Axcera

THIS PRINT IS THE PROPERTY OF AXCERA, IT SHALL NOT BE COPIED WITHOUT PERMISSION

MATERIAL ------

FINISH ------

TITLE SCH., FIRST CONVERSION BD., LX (1303838)

DWN	JKF	4/2/04	
CHK	DB	4/20/04	
PEL	DB	4/23/04	D

DWG. NO. 1303840 REV C0

SCALE ------ SHEET 1 OF 2

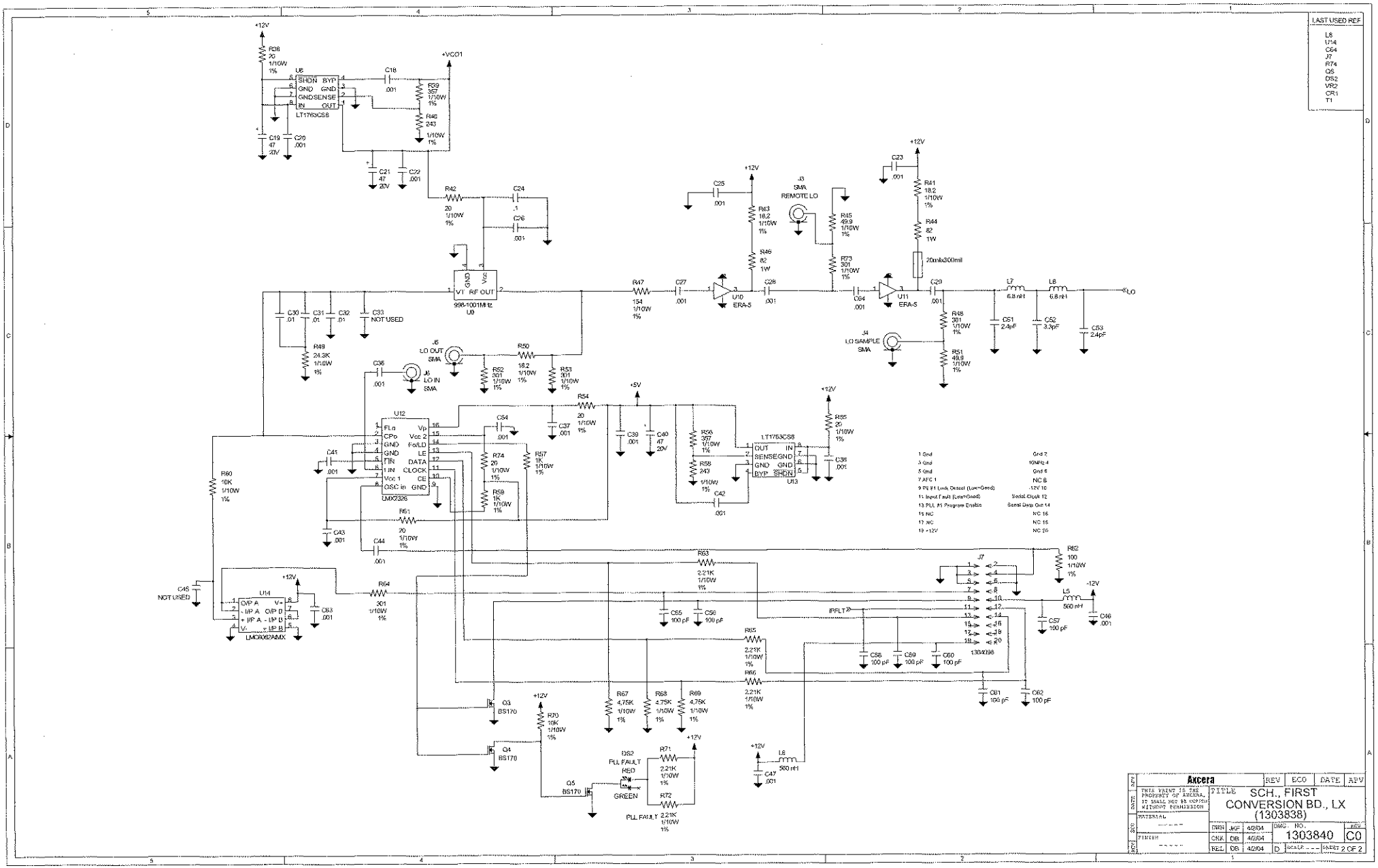
LAST USED REF
L8
T14
C64
J7
R74
Q5
DS2
VR2
CR1
T1
+12V
R38 20 1/10W 1%
U8
SHDN BYP
GND GND
GND SENSE
IN OUT
LT1763CS8
C16 .001
R39 357 1/10W 1%
R40 243 1/10W 1%
+VCO1
C19 47 20V
C20 .001
C21 47 20V
C22 .001
R42 20 1/10W 1%
C24 .1
C26 .001
GND
VT RF OUT
VCC
936-1001MHz
U0
C30 .01
C31 .01
C32 .01
C33 NOT USED
R49 24.3K 1/10W 1%
J5 LO OUT SMA
J6 LO IN SMA
C36 .001
R50 18.2 1/10W 1%
R52 301 1/10W 1%
R53 301 1/10W 1%
R47 154 1/10W 1%
C27 .001
C25 .001
R43 18.2 1/10W 1%
R46 82 1W
U10 ERA-5
C28 .001
J3 SMA REMOTE LO
R45 49.9 1/10W 1%
R73 301 1/10W 1%
C64 .001
C23 .001
R41 18.2 1/10W 1%
R44 82 1W
20mils/300mil
U11 ERA-5
C29 .001
L7 6.8 nH
L8 6.8 nH
LO
R48 301 1/10W 1%
J4 LO SAMPLE SMA
R51 49.9 1/10W 1%
C51 2.4pF
C52 3.3pF
C53 2.4pF
R54 20 1/10W 1%
+5V
C37 .001
C39 .001
C40 47 20V
U12
FLo Vp
CPo Vcc 2
GND Fo/LD
GND LE
TIN DATA
1 IN CLOCK
Vcc 1 CE
OSC in GND
LMX2326
C54 .001
C41 .001
R74 20 1/10W 1%
R57 1K 1/10W 1%
R59 1K 1/10W 1%
R60 10K 1/10W 1%
R51 20 1/10W 1%
C43 .001
C44 .001
R56 357 1/10W 1%
R58 243 1/10W 1%
C42 .001
LT1763CS8
OUT IN
SENSE GND
GND GND
BYP SHDN
U13
R55 20 1/10W 1%
C38 .001
1 Gnd
3 Gnd
5 Gnd
7 AFC 1
9 PE #1 Lock Detect (Low=Good)
11 Input Fault (Low=Good)
13 PLL #1 Program Enable
15 NC
17 NC
19 +12V
Gnd 2
10MHz 4
Gnd 6
NC 8
-12V 10
Serial Clock 12
Serial Data Out 14
NC 16
NC 18
NC 20
C45 NOT USED
U14
O/P A V+
- I/P A O/P B
+ I/P A - I/P B
V- + I/P B
LMC6082AIMX
C63 .001
R64 301 1/10W 1%
R63 2.21K 1/10W 1%
C55 100 pF
C56 100 pF
R62 100 1/10W 1%
J7
L5 560 nH
C57 100 pF
C46 .001
-12V
IPFLT
C58 100 pF
C59 100 pF
C60 100 pF
1303838
R65 2.21K 1/10W 1%
R66 2.21K 1/10W 1%
C61 100 pF
C62 100 pF
Q3 BS170
Q4 BS170
R70 10K 1/10W 1%
R67 4.75K 1/10W 1%
R68 4.75K 1/10W 1%
R69 4.75K 1/10W 1%
DS2 PLL FAULT RED GREEN
Q5 BS170
R71 2.21K 1/10W 1%
R72 2.21K 1/10W 1%
PLL FAULT
L6 560 nH
C47 .001
Axcera
THIS PRINT IS THE PROPERTY OF AXCERA, IT SHALL NOT BE COPIED WITHOUT PERMISSION
MATERIAL
FINISH
REV ECO DATE APV
TITLE
SCH., FIRST CONVERSION BD., LX (1303838)
DRN JKF 4/2/04
CHK DB 4/2/04
REL DB 4/2/04
DWG. NO. 1303840
REV C0
D
SCALE
SHEET 2 OF 2

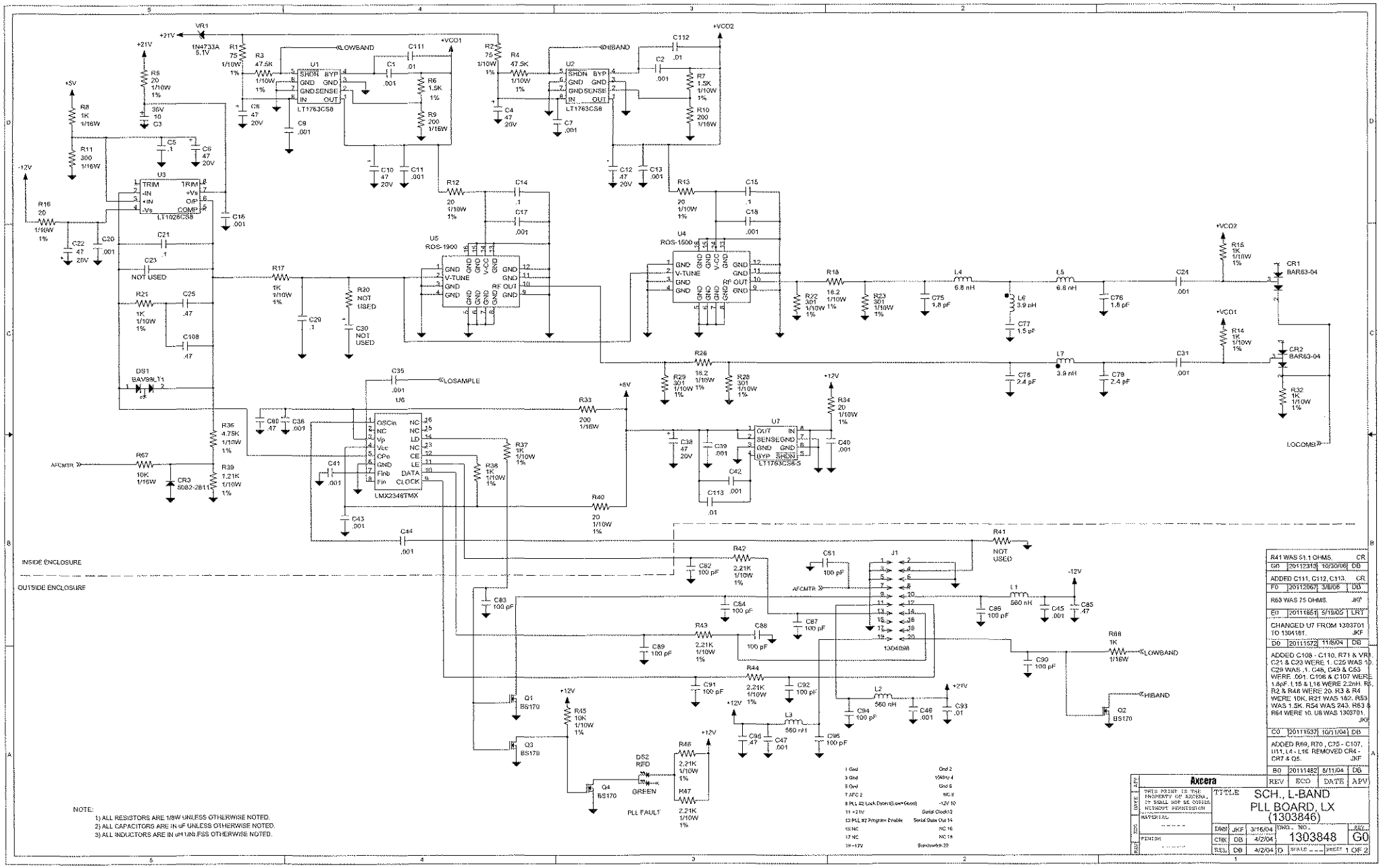

NOTE:
1) ALL RESISTORS ARE 1/8W UNLESS OTHERWISE NOTED.
2) ALL CAPACITORS ARE IN uF UNLESS OTHERWISE NOTED.
3) ALL INDUCTORS ARE IN uH UNLESS OTHERWISE NOTED.

REV	ECO	DATE	APV
G0	20112313	10/30/06	DB
F0	20112067	3/8/06	DB
E0	20111651	5/19/05	LRT
D0	20111572	11/8/04	DB
C0	20111537	10/11/04	DB
B0	20111482	8/11/04	DG

R41 WAS 51.1 OHMS. CR
ADDED C111, C112, C113. CR
R63 WAS 75 OHMS. JKF
CHANGED U7 FROM 1303701 TO 1304181. JKF
ADDED C108 - C110, R71 & VR1. C21 & C23 WERE 1. C25 WAS 10. C29 WAS .1. C48, C49 & C53 WERE .001. C106 & C107 WERE 1.8pF. L15 & L16 WERE 2.2nH. R1, R2 & R48 WERE 20. R3 & R4 WERE 10K. R21 WAS 182. R53 WAS 1.5K. R54 WAS 243. R63 & R64 WERE 10. U8 WAS 1302701. JKF
ADDED R69, R70, C75 - C107, U11, L4 - L16 REMOVED CR4 - CR7 & Q5. JKF

Axcera

THIS DRAWING IS THE PROPERTY OF AXCERA, IT SHALL NOT BE COPIED WITHOUT PERMISSION

MATERIAL ------

FINISH ------

TITLE: SCH., L-BAND PLL BOARD, LX (1303846)

DRN	JKF	3/16/04	DWG. NO. 1303848 REV. G0
CHK	DB	4/2/04	
ISS.	DB	4/2/04	SCALE --- SHEET 1 OF 2

LAST USED REF
C113
L16
U11
R71
J4
Q4
CR3
DS2
VR1

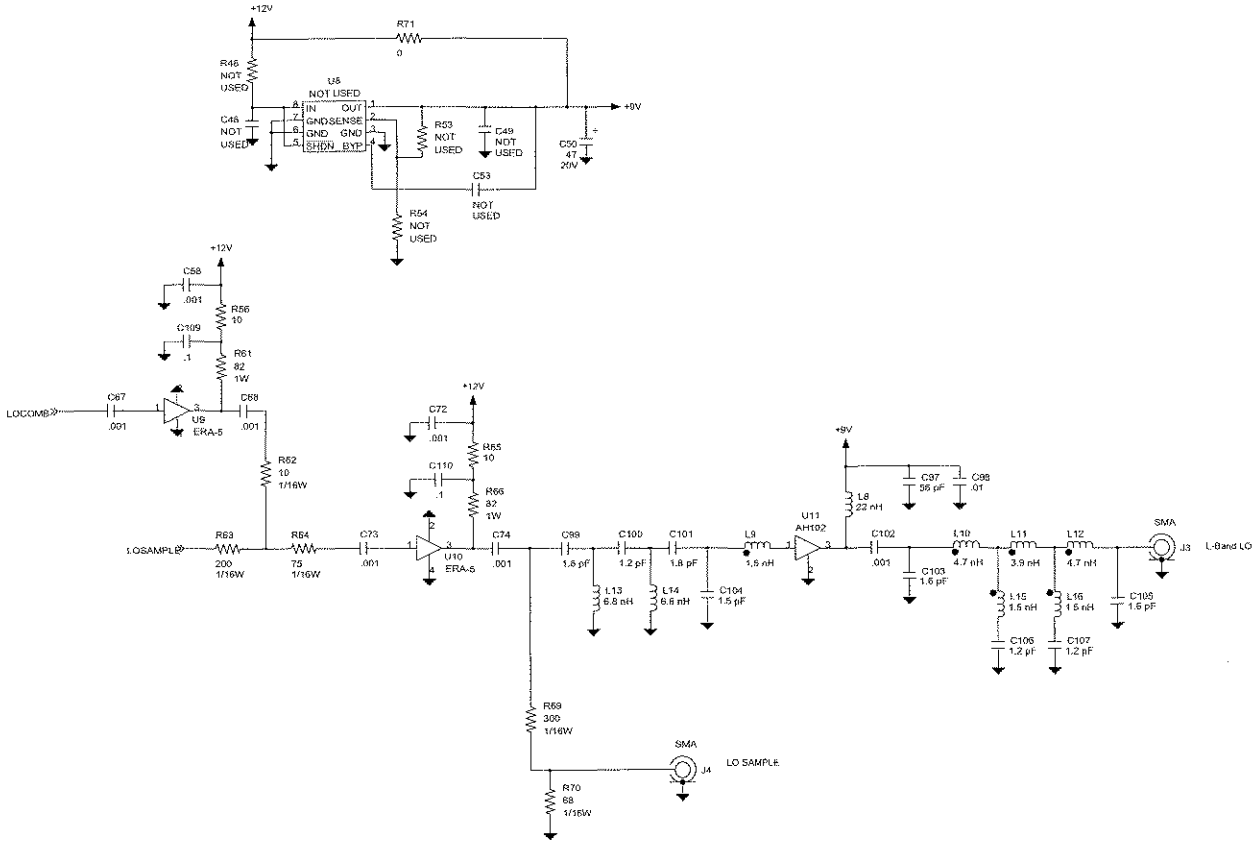

Axcera		REV	ECO	DATE	APV
THIS PRINT IS THE PROPERTY OF AXCERA. IT SHALL NOT BE COPIED WITHOUT PERMISSION	TITLE SCH., L-BAND PLL BOARD, LX (1303846)				
MATERIAL -----	DWN JKF 3/16/04	DWG. NO. 1303848		REV G0	
FINISH	CHK DB 4/2/04				
	REL DB 4/2/04	D	SCALE ----	SHEET 2 OF 2	

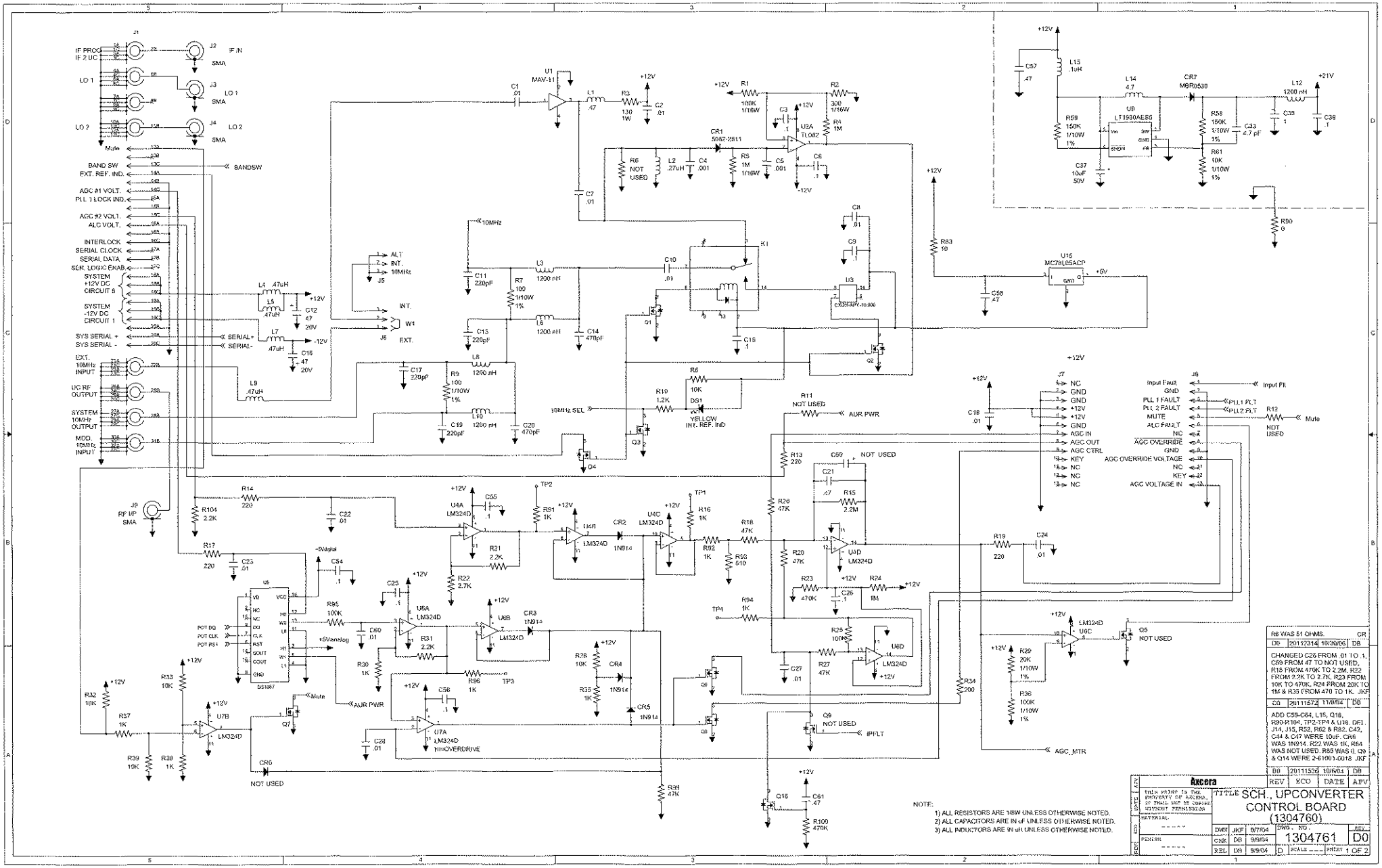
IF PROC
IF 2 UC
LO 1
LO 2
Mute
BAND SW
EXT. REF. IND.
AGC #1 VOLT.
PLL 1 LOCK IND.
AGC #2 VOLT.
ALC VOLT.
INTERLOCK
SERIAL CLOCK
SERIAL DATA
SER. LOGIC ENAB.
SYSTEM +12V DC CIRCUIT 5
SYSTEM -12V DC CIRCUIT 1
SYS SERIAL +
SYS SERIAL -
EXT. 10MHz INPUT
UC RF OUTPUT
SYSTEM 10MHz OUTPUT
MOD. 10MHz INPUT
IF IN
SMA
BANDSW
SERIAL+
SERIAL-
ALT
INT.
10MHz
EXT.
J5
J6
W1
K1
U1 MAV-11
U2A TL082
U3 CX053-PV-10.000
U4A LM324D
U4B LM324D
U4C LM324D
U4D LM324D
U6A LM324D
U6B LM324D
U6C LM324D
U6D LM324D
U7A LM324D HI-OVERDRIVE
U7B LM324D
U8 DS1867
U9 LT1930AES
U16 MC78L05ACP
CR1 5082-2811
CR2 1N914
CR3 1N914
CR4 1N914
CR5 1N914
CR6 NOT USED
CR7 MBR0530
DS1 YELLOW INT. REF. IND
Q1
Q2
Q3
Q4
Q5 NOT USED
Q6
Q7
Q9 NOT USED
Q16
J9 RF I/P SMA
AUR PWR
R11 NOT USED
R12 NOT USED
Mute
Input Fault
GND
PLL 1 FAULT
PLL 2 FAULT
MUTE
ALC FAULT
NC
AGC OVERRIDE
AGC OVERRIDE VOLTAGE
KEY
AGC VOLTAGE IN
Input Fil
PLL1 FLT
PLL2 FLT
AGC IN
AGC OUT
AGC CTRL
IPFLT
AGC_MTR
10MHz SEL
+5Vdigital
+5Vanalog
POT DQ
POT CLK
POT RST
NOT USED
R6 WAS 51 OHMS.
CHANGED C26 FROM .01 TO .1, C59 FROM 47 TO NOT USED, R15 FROM 470K TO 2.2M, R22 FROM 2.2K TO 2.7K, R23 FROM 10K TO 470K, R24 FROM 20K TO 1M & R35 FROM 470 TO 1K. JKF
ADD C59-C64, L15, Q16, R90-R104, TP2-TP4 & U16. DF1. J14, J15, R52, R62 & R82. C42, C44 & C47 WERE 10uF. CR6 WAS 1N914. R22 WAS 1K, R64 WAS NOT USED. R65 WAS 0. Q9 & Q14 WERE 2-61001-0018. JKF
Axcera
TITLE SCH., UPCONVERTER CONTROL BOARD (1304760)
DWG. NO. 1304761
REV D0
SCALE ---
SHEET 1 OF 2
NOTE:
1) ALL RESISTORS ARE 1/8W UNLESS OTHERWISE NOTED.
2) ALL CAPACITORS ARE IN uF UNLESS OTHERWISE NOTED.
3) ALL INDUCTORS ARE IN uH UNLESS OTHERWISE NOTED.

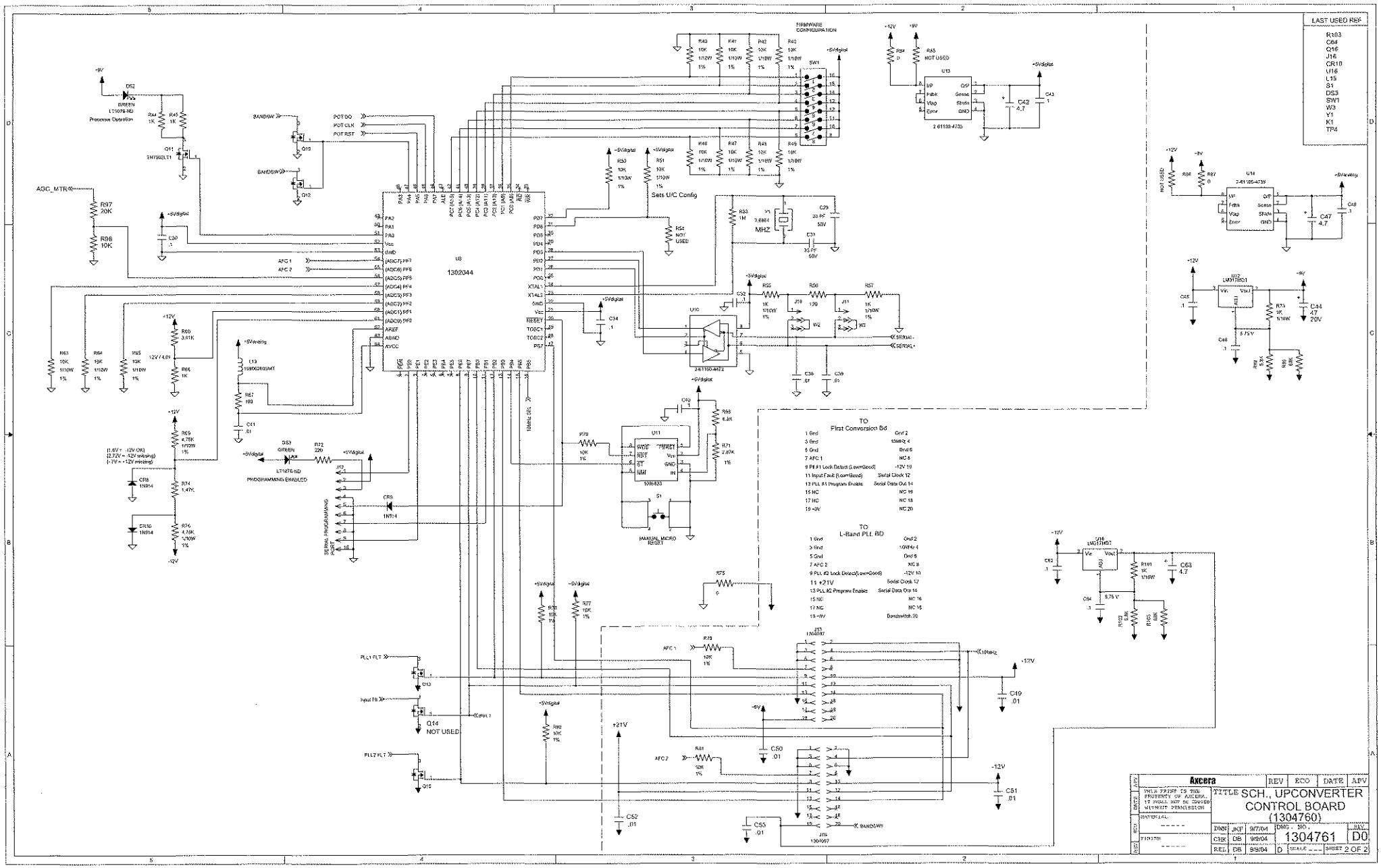
LAST USED REF
R103
C84
Q16
J16
CR10
U16
L15
S1
DS3
SW1
W3
Y1
K1
TP4
FIRMWARE CONFIGURATION
Sets U/C Config
U8
1302044
MHZ
TO
First Conversion Bd
TO
L-Band PLL BD
MANUAL MICRO RESET
PROGRAMMING ENABLED
SERIAL PROGRAMMING PORT
AGC_MTR
POT DO
POT CLK
POT RST
BANDSW
AFC 1
AFC 2
PLL1 FLT
PLL2 FLT
Input FB
Q14
NOT USED
+21V
-12V
+12V
+5Vdigital
-5Vdigital
+5Vanalog
10MHz
SERIAL-
SERIAL+
Axcera
TITLE SCH., UPCONVERTER CONTROL BOARD (1304760)
1304761
D0
SHEET 2 OF 2

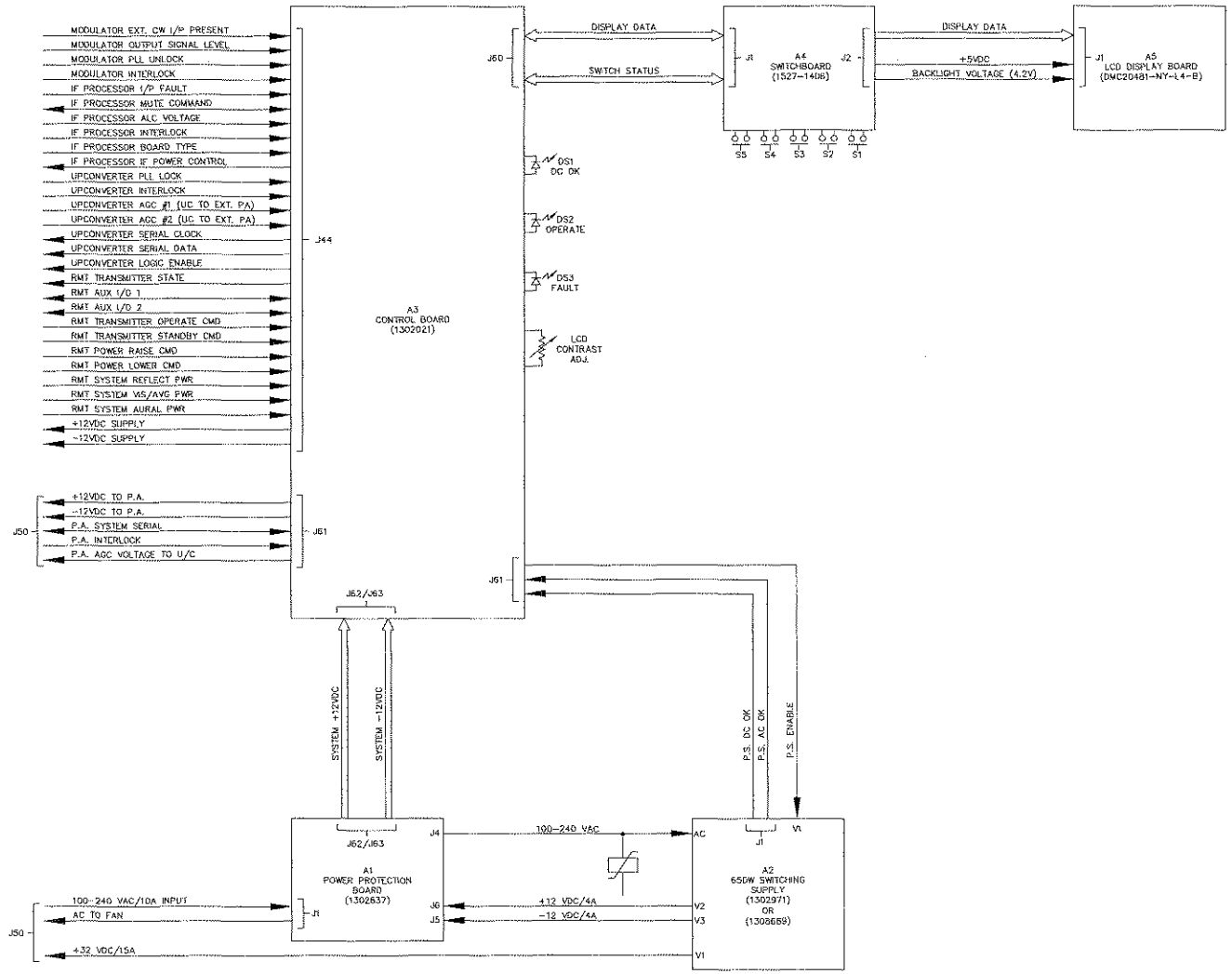

REV	ECO	DATE	APV

Axcera.

THIS PRINT IS THE PROPERTY OF AXCERA. IT SHALL NOT BE COPIED WITHOUT PERMISSION.

MATERIAL ------

FINISH ------

TITLE B/D, CONTROL/POWER SUPPLY ASSEMBLY, INNOVATOR LX

DWN	RGC	1/28/04	
CHK	JCM	2/2/04	
REL	JCM	2/2/04	D

DWG. NO. 1303889 REV A0

SCALE --- SHEET 1 OF 1

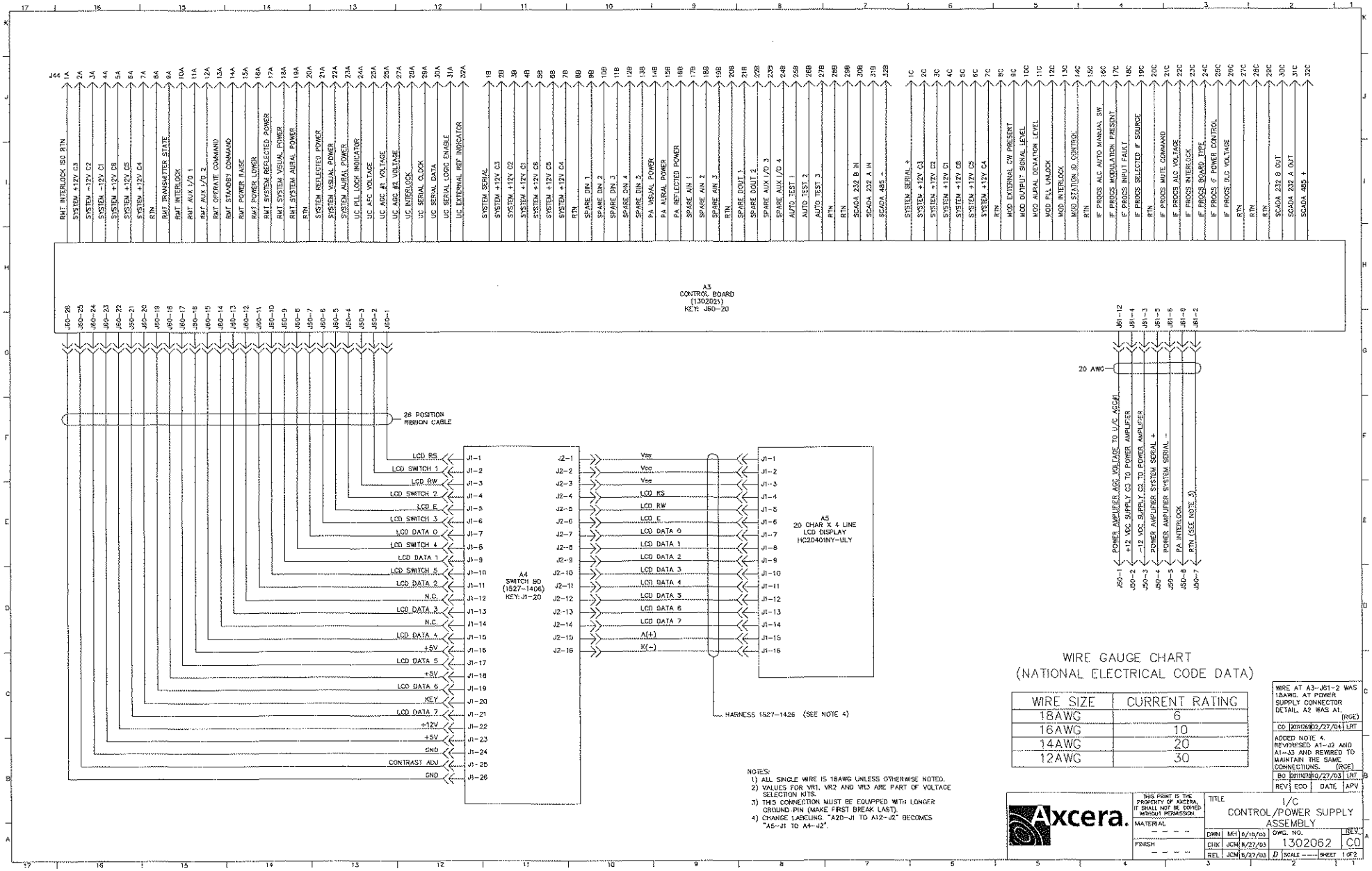

WIRE GAUGE CHART
(NATIONAL ELECTRICAL CODE DATA)

WIRE SIZE	CURRENT RATING
18AWG	6
16AWG	10
14AWG	20
12AWG	30

NOTES:
1) ALL SINGLE WIRE IS 18AWG UNLESS OTHERWISE NOTED.
2) VALUES FOR VR1, VR2 AND VR3 ARE PART OF VOLTAGE SELECTION KITS.
3) THIS CONNECTION MUST BE EQUIPPED WITH LONGER GROUND PIN (MAKE FIRST BREAK LAST).
4) CHANGE LABELING "A20-J1 TO A12-J2" BECOMES "A5-J1 TO A4-J2".

REV	ECO	DATE	APV
BO	20110708	10/27/03	LRT
CO	20110268	02/27/04	LRT

WIRE AT A3-J61-2 WAS 18AWG. AT POWER SUPPLY CONNECTOR DETAIL, A2 WAS A1. (RGE)

ADDED NOTE 4. REVERSED A1-J2 AND A1-J3 AND REWIRED TO MAINTAIN THE SAME CONNECTIONS. (RGE)

Axcera.

THIS PRINT IS THE PROPERTY OF AXCERA. IT SHALL NOT BE COPIED WITHOUT PERMISSION.

MATERIAL — — — —

FINISH — — — —

TITLE: I/C CONTROL/POWER SUPPLY ASSEMBLY

DWN	MH	6/18/03	DWG. NO. 1302062
CHK	JCM	8/27/03	REV. C0
REL	JCM	8/27/03	D SCALE --- SHEET 1 OF 2

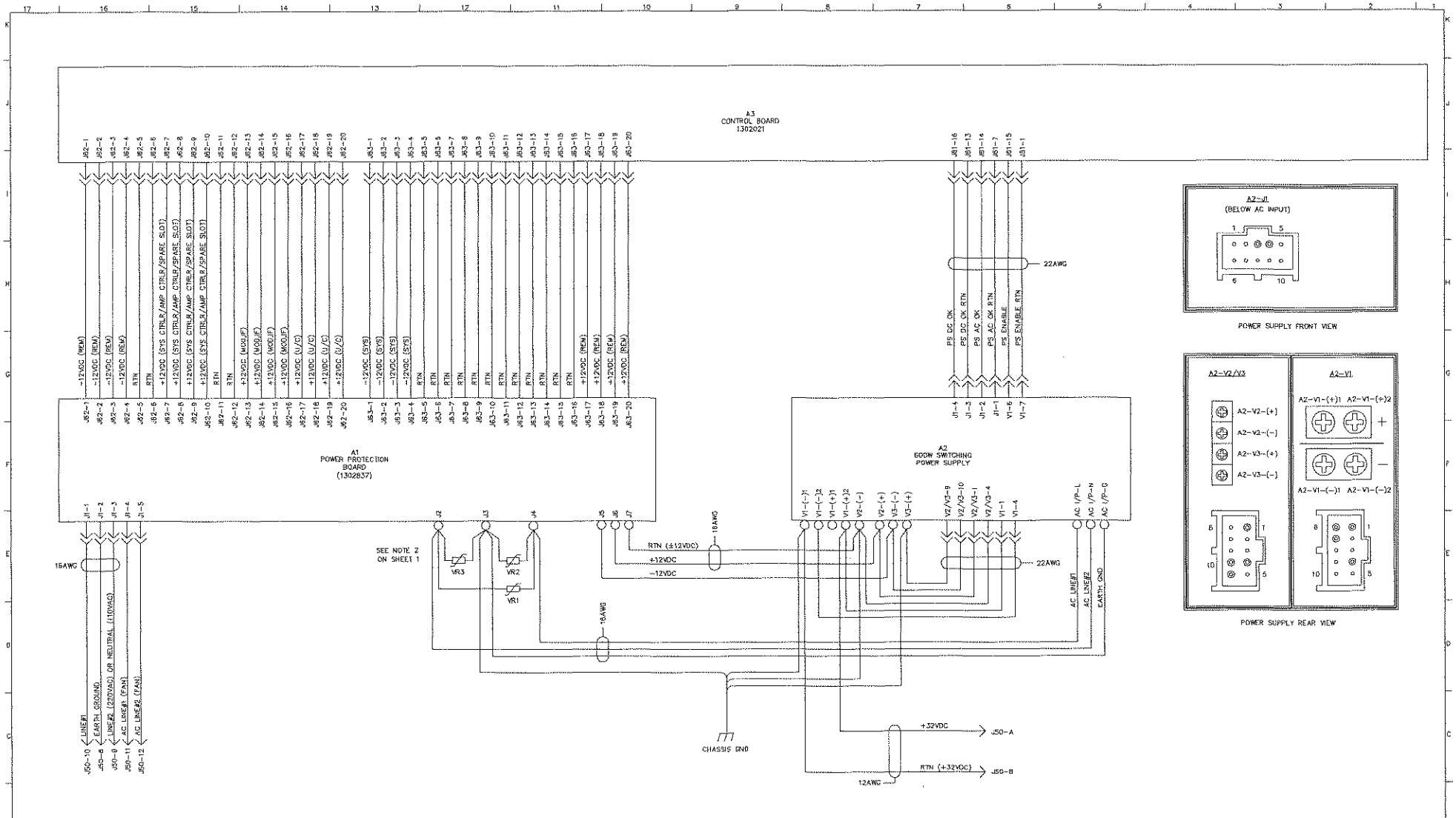

REV	ECO	DATE	APV

Axcera.

THIS PRINT IS THE PROPERTY OF AXCERA. IT SHALL NOT BE COPIED WITHOUT PERMISSION.

MATERIAL - - - -

FINISH - - - -

TITLE I/C CONTROL/POWER SUPPLY ASSEMBLY

DWN	NH	6/18/03
CHK	JCM	8/27/03
REL	JCM	8/27/03

DWG. NO. 1302062 REV. C0

D SCALE ---- SHEET 2 OF 2

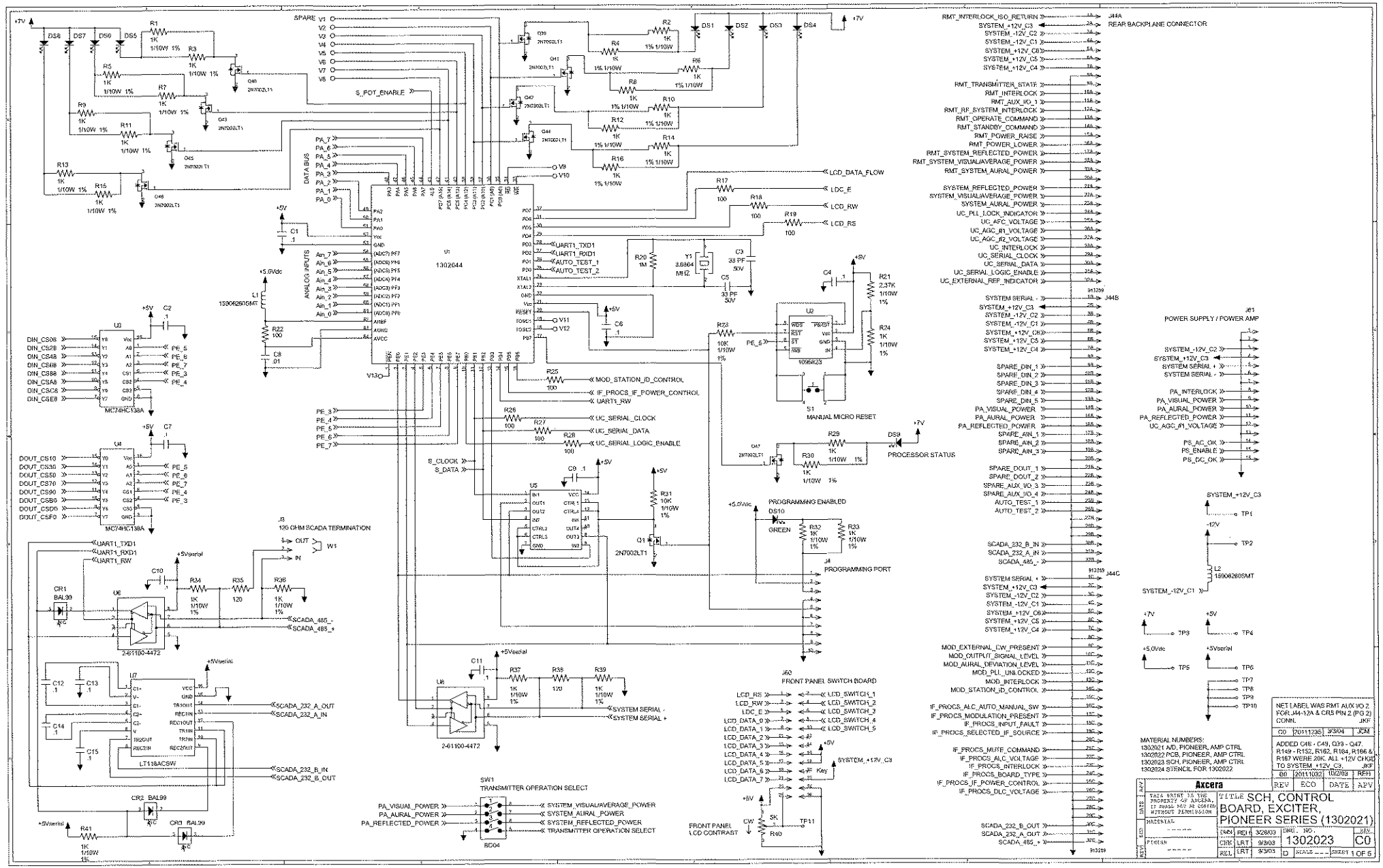
J44A
REAR BACKPLANE CONNECTOR
J44B
J44C
J61
POWER SUPPLY / POWER AMP
U1
1302044
U2
10956023
S1
MANUAL MICRO RESET
PROCESSOR STATUS
PROGRAMMING ENABLED
J4
PROGRAMMING PORT
J3
120 OHM SCADA TERMINATION
J63
FRONT PANEL SWITCH BOARD
SW1
TRANSMITTER OPERATION SELECT
BD04
FRONT PANEL LCD CONTRAST
DATA BUS
ANALOG INPUTS
S_POT_ENABLE
S_CLOCK
S_DATA
MOD_STATION_ID_CONTROL
IF_PROCS_IF_POWER_CONTROL
UARTS_RW
UC_SERIAL_CLOCK
UC_SERIAL_DATA
UC_SERIAL_LOGIC_ENABLE
LCD_DATA_FLOW
LDC_E
LCD_RW
LCD_RS
SCADA_232_A_OUT
SCADA_232_A_IN
SCADA_232_B_IN
SCADA_232_B_OUT
SCADA_485_-
SCADA_485_+
SYSTEM SERIAL -
SYSTEM SERIAL +
NET LABEL WAS RMT AUX IO 2 FOR J44-12A & CR5 PIN 2 (PG 2) CONN.
ADDED C48 - C49, Q39 - Q47. R149 - R152, R162, R164, R166 & R167 WERE 20K. ALL +12V CHKD TO SYSTEM_+12V_C3.
MATERIAL NUMBERS:
1302021 A/D, PIONEER, AMP CTRL
1302022 PCB, PIONEER, AMP CTRL
1302023 SCH, PIONEER, AMP CTRL
1302024 STENCIL FOR 1302022
Axcera
TITLE SCH, CONTROL BOARD, EXCITER, PIONEER SERIES (1302021)
1302023
C0
SHEET 1 OF 5

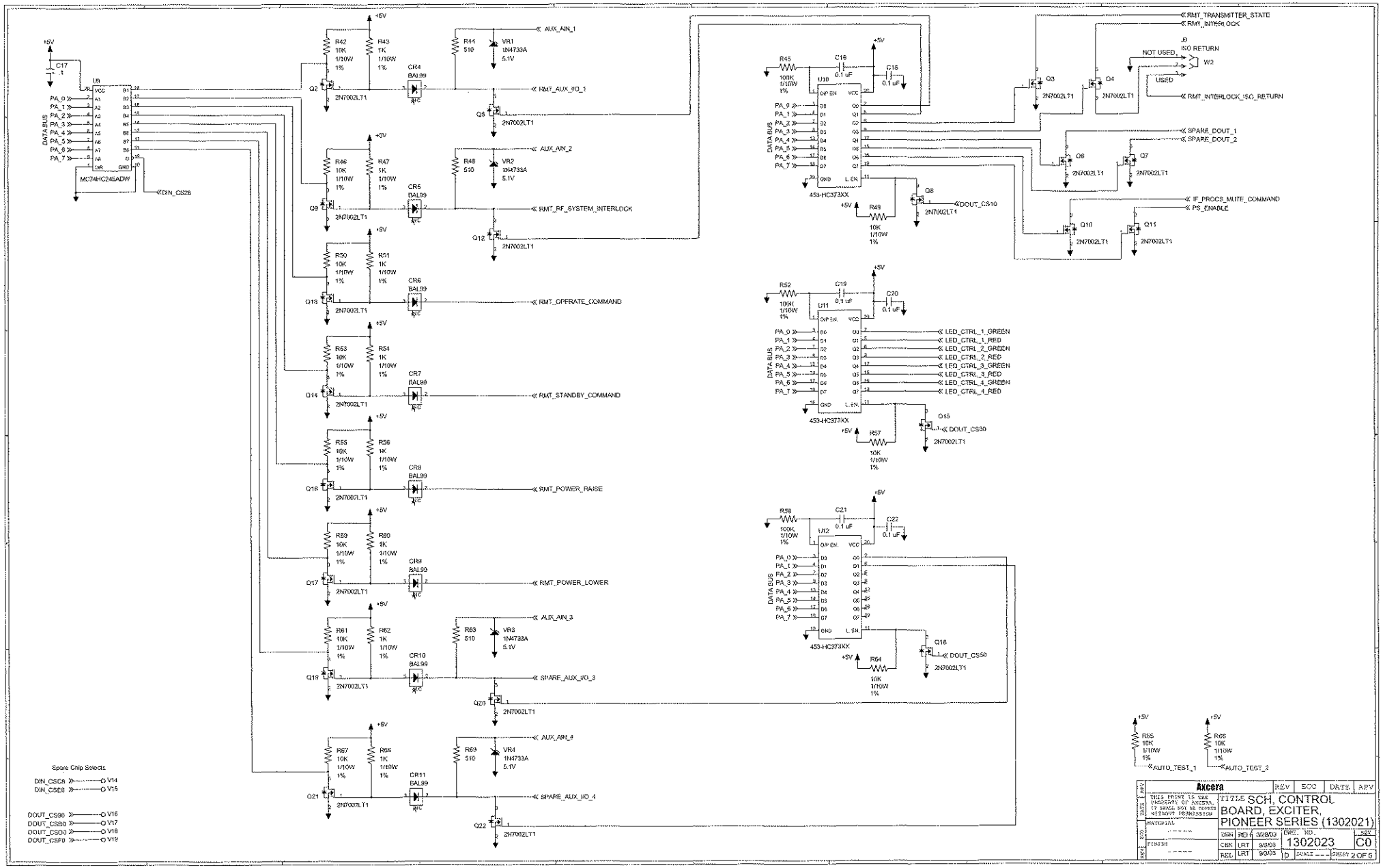
U8
MC74HC245ADW
DIN_CS28
DATA BUS
PA_0
PA_1
PA_2
PA_3
PA_4
PA_5
PA_6
PA_7
C17
+5V
R42 10K 1/10W 1%
R43 1K 1/10W 1%
R44 510
VR1 1N4733A 5.1V
AUX_AIN_1
CR4 BAL99
Q2 2N7002LT1
Q5 2N7002LT1
RMT_AUX_I/O_1
R46 10K 1/10W 1%
R47 1K 1/10W 1%
R48 510
VR2 1N4733A 5.1V
AUX_AIN_2
CR5 BAL99
Q9 2N7002LT1
Q12 2N7002LT1
RMT_RF_SYSTEM_INTERLOCK
R50 10K 1/10W 1%
R51 1K 1/10W 1%
CR6 BAL99
Q13 2N7002LT1
RMT_OPERATE_COMMAND
R53 10K 1/10W 1%
R54 1K 1/10W 1%
CR7 BAL99
Q14 2N7002LT1
RMT_STANDBY_COMMAND
R55 10K 1/10W 1%
R56 1K 1/10W 1%
CR8 BAL99
Q16 2N7002LT1
RMT_POWER_RAISE
R59 10K 1/10W 1%
R60 1K 1/10W 1%
CR9 BAL99
Q17 2N7002LT1
RMT_POWER_LOWER
R61 10K 1/10W 1%
R62 1K 1/10W 1%
R63 510
VR3 1N4733A 5.1V
AUX_AIN_3
CR10 BAL99
Q19 2N7002LT1
Q20 2N7002LT1
SPARE_AUX_I/O_3
R67 10K 1/10W 1%
R68 1K 1/10W 1%
R69 510
VR4 1N4733A 5.1V
AUX_AIN_4
CR11 BAL99
Q21 2N7002LT1
Q22 2N7002LT1
SPARE_AUX_I/O_4
Spare Chip Selects
DIN_CSC8 V14
DIN_CSE8 V15
DOUT_CSB0 V16
DOUT_CSB0 V17
DOUT_CSD0 V18
DOUT_CSF0 V19
R45 100K 1/10W 1%
C16 0.1 uF
C15 0.1 uF
U10
453-HC373XX
R49 10K 1/10W 1%
Q8 2N7002LT1
DOUT_CS10
RMT_TRANSMITTER_STATE
RMT_INTERLOCK
J8 ISO RETURN
NOT USED
W2
USED
RMT_INTERLOCK_ISO_RETURN
Q3 2N7002LT1
Q4 2N7002LT1
SPARE_DOUT_1
SPARE_DOUT_2
Q6 2N7002LT1
Q7 2N7002LT1
IF_PROCS_MUTE_COMMAND
PS_ENABLE
Q10 2N7002LT1
Q11 2N7002LT1
R52 100K 1/10W 1%
C19 0.1 uF
C20 0.1 uF
U11
LED_CTRL_1_GREEN
LED_CTRL_1_RED
LED_CTRL_2_GREEN
LED_CTRL_2_RED
LED_CTRL_3_GREEN
LED_CTRL_3_RED
LED_CTRL_4_GREEN
LED_CTRL_4_RED
R57 10K 1/10W 1%
Q15 2N7002LT1
DOUT_CS30
R58 100K 1/10W 1%
C21 0.1 uF
C22 0.1 uF
U12
R64 10K 1/10W 1%
Q18 2N7002LT1
DOUT_CS50
R65 10K 1/10W 1%
AUTO_TEST_1
R66 10K 1/10W 1%
AUTO_TEST_2
Axcera
REV
ECO
DATE
APV
THIS PRINT IS THE PROPERTY OF AXCERA. IT SHALL NOT BE COPIED WITHOUT PERMISSION
TITLE SCH, CONTROL BOARD, EXCITER, PIONEER SERIES (1302021)
MATERIAL
FINISH
DRN REH 3/28/03
CHK LRT 9/3/03
REL LRT 9/3/03
SIZE D
DWG. NO. 1302023
REV C0
SCALE ---
SHEET 2 OF 5

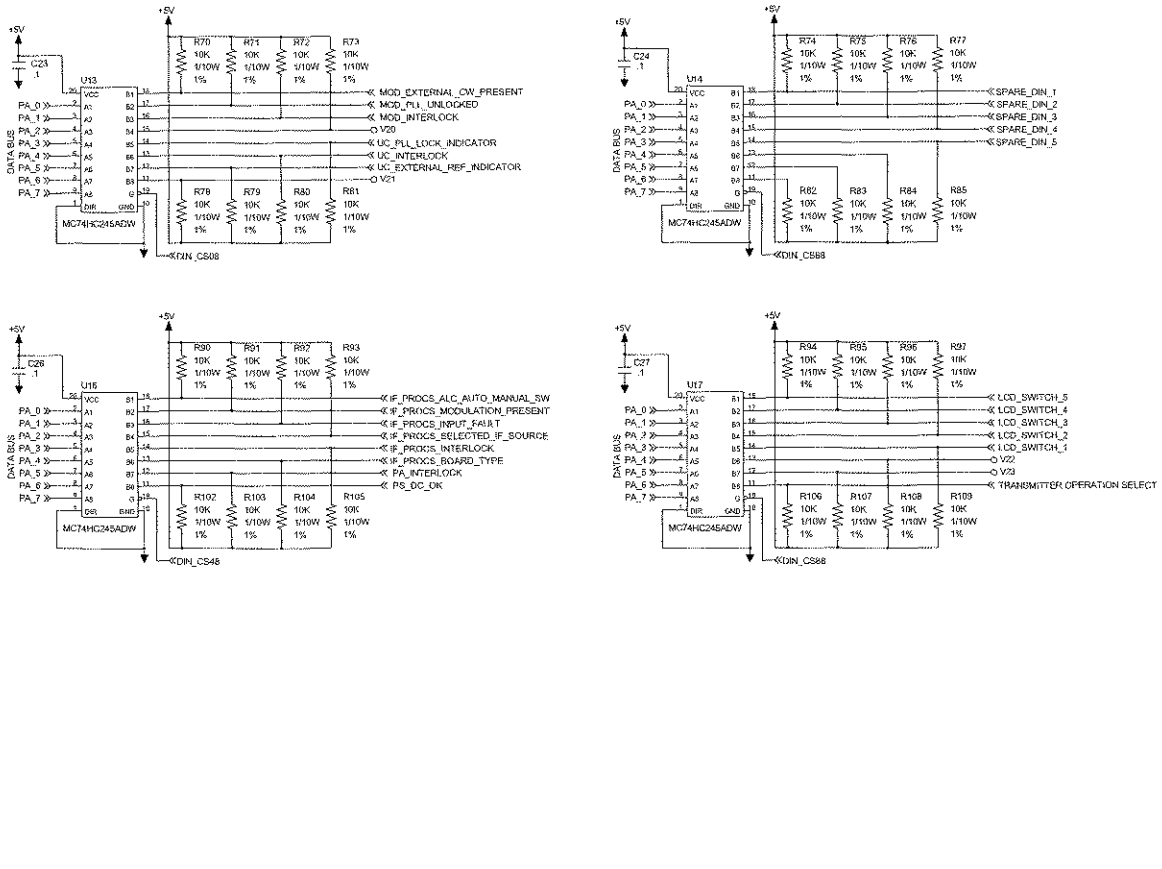

Axcera		REV	ECO	DATE	APV
THIS DRAWING IS THE PROPERTY OF AXCERA. IT SHALL NOT BE COPIED WITHOUT PERMISSION	TITLE SCH, CONTROL BOARD, EXCITER, PIONEER SERIES (1302021)				
MATERIAL ----	DRN REH 3/28/03	DWG. NO. 1302023		REV C0	
FINISH ----	CHK LRT 9/3/03				
	REL LRT 9/3/03	D	SCALE ----	SHEET 3 OF 5	

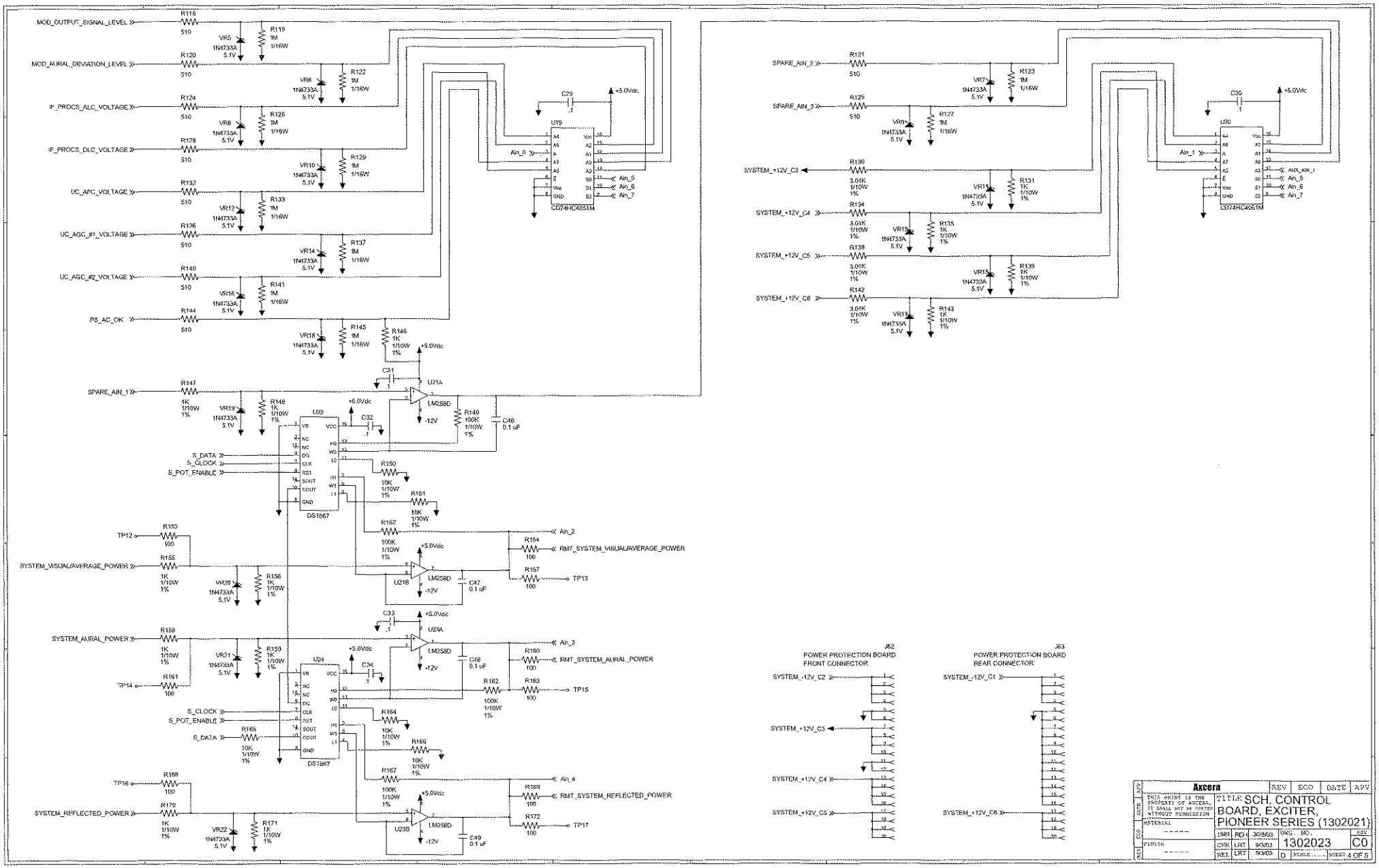
MOD_OUTPUT_SIGNAL_LEVEL
MOD_AURAL_DEVIATION_LEVEL
IF_PROCS_ALC_VOLTAGE
IF_PROCS_DLC_VOLTAGE
UC_AFC_VOLTAGE
UC_AGC_#1_VOLTAGE
UC_AGC_#2_VOLTAGE
PS_AC_OK
SPARE_AIN_1
SPARE_AIN_2
SPARE_AIN_3
SYSTEM_+12V_C3
SYSTEM_+12V_C4
SYSTEM_+12V_C5
SYSTEM_+12V_C6
S_DATA
S_CLOCK
S_POT_ENABLE
SYSTEM_VISUAL/AVERAGE_POWER
SYSTEM_AURAL_POWER
SYSTEM_REFLECTED_POWER
RMT_SYSTEM_VISUAL/AVERAGE_POWER
RMT_SYSTEM_AURAL_POWER
RMT_SYSTEM_REFLECTED_POWER
+5.0Vdc
+9.0Vdc
-12V
LM258D
DS1867
CD74HC4051M
POWER PROTECTION BOARD FRONT CONNECTOR
POWER PROTECTION BOARD REAR CONNECTOR
Axcera
THIS PRINT IS THE PROPERTY OF AXCERA, IT SHALL NOT BE COPIED WITHOUT PERMISSION
TITLE: SCH, CONTROL BOARD, EXCITER, PIONEER SERIES (1302021)
DWG. NO. 1302023
REV C0
SHEET 4 OF 5

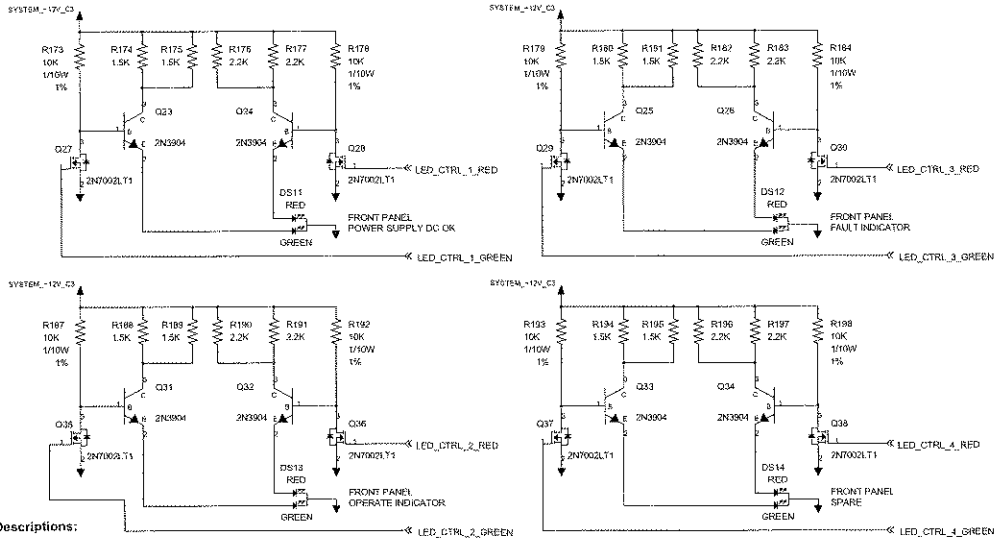

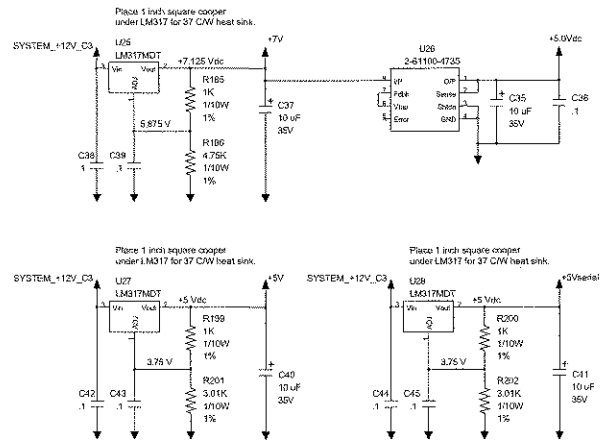

LAST USED REF.
R202
C49
Q47
DS14
U28
VR22
J63
TP17
V23
SW2
CR11
W2
Y1
L2
S1

Circuit Descriptions:

PAGE 1:

U1 is an Atmel Atmega128 microcontroller. This part is in-circuit programmed using the serial programming port. When the microcontroller is held in reset by either the programming port or the external watchdog IC, a transistor inverts the reset signal while serial programming lines are connected to U1 through analog switch U5.

U2 is a watchdog IC used to hold the microcontroller in reset if the supply voltage is less than 4.21 Vdc; (1.25 Vdc < Pin 4 (IN) < Pin 2 (Vcc)). The watchdog momentarily resets the microcontroller if Pin 6 (!ST) is not clocked every second. A manual reset switch is provided but should not be needed.

Diodes DS1 through DS8 are used for display of auto test results. A test board is used to execute self test routines. When the test board is installed, Auto_Test_1 is held low and Auto_Test_2 is allowed to float at 5 Vdc. This is the signal to start the auto test routines.

U3 and U4 are used to selectively enable various input and output ICs found on page 2 and 3 of the schematic.

U1 has two serial ports available. In this application, one port is used to communicate with transmitter system components where U1 is the master of a RS-485 serial bus. The other serial port is used to provide serial data I/O where U1 is not the master of the data port. A dual RS-232 port driver IC and a RS-485 port driver is also in the second serial data I/O system. The serial ports are wired such that serial data input can come through one of the three serial port channels. Data output is sent out through each of the three serial port channels.

Switch SW1 is used to select either transmitter operation or exciter driver operation. When the switches of SW1 are on, transmitter operation is selected and the power monitoring lines of the transmitter's power amplifier are routed to the system power monitoring lines.

PAGE 2:

Digital output latches are used to control system devices. Remote output circuits are implemented using open drain FETs with greater than 60 Volt drain to source voltage ratings.

Remote digital inputs are diode protected with a 1 Kohm pull-up resistor to 5Vdc. If the remote input voltage is greater than about 2 volts or floating, a FET is turned on and a logic low is applied to the digital input buffer. If the remote input voltage is less than the turn on threshold of the FET (about 2 Vdc), a logic high is applied to the digital input buffer.

Four of the circuits on page two are auxiliary I/O connections wired for future use. They are wired similar to the remote digital inputs but include a FET for digital output operation. To operate these signals as an input, the associated output FET must be turned off. These circuits are also connected to an analog input multiplexer IC.

PAGE 3:

Several ICs are used as input buffers to allow the microcontroller to monitor various digital input values. Most digital inputs use a 10 Kohm pull-up resistor. The buffer IC used for data transfer to the display is wired for read and write control.

PAGE 4:

Each analog input is expected to be between 0 and 5 Vdc. If a signal exceeds 5.1 Vdc, a 0.225 Watt zenor diode clamps the signals voltage. Most signals are calibrated at their source however two dual serial potentiometer ICs are used to calibrate four signals. For these four circuits, the input value is divided in half before it is applied to an op-amp. The serial potentiometer is used to adjust the input signal between 80 and 120% of the input signal. Serial data to the second serial potentiometer is transferred through the first IC. The wiper position of the digital potentiometer circuit is used to set the gain of the op-amp. Lower digital values for the wiper setting increases the gain of the op-amp. If N= 0, gain = 6.0. If N = 255, gain = 3.00. If Vin = 1.0 at spare_Ain_1 and N = 128, U21A out = 4.0V with gain = 4.

Two 20 position connectors are used to provide power to the backplane. J62 and J63 get power from the power supply after a nominal 3 amp resettable fuse. The Raychem polyswitch resettable fuses may open on a current as low as 2.43 amps at 50C, 3 amps at 25 C or 3.3 amps at 0C. They definately will open when the current is 4.86 amps at 50C, 6 amps at 25C, or 6.6 amps at 0C. Trace widths of these circuits are 0.140" (designed for maximum current).

PAGE 5:

Each of the four LED circuits drive a dual element common cathode LED. To make a good amber color, the current applied to the green element is slightly greater than the red element.

Several voltage regulators are used to power the board. Seven volts is typically applied to board LEDs and to the input of a precision 5.0 volt regulator. The 5.0 volt regulator is used for analog circuits and the microcontroller analog reference voltage. Another two 5 volt regulator circuits are used for most other board circuits.

Axcera		REV	ECO	DATE	APV
THIS DRAWING IS THE PROPERTY OF AXCERA, TO SHALL NOT BE COPIED WITHOUT PERMISSION	TITLE SCH, CONTROL BOARD, EXCITER, PIONEER SERIES (1302021)				
MATERIAL ------	DRW RSH 3/28/03	DWG. NO. 1302023			REV C0
FINISH ------	CHK LRT 9/3/03				
	REL LRT 9/3/03	D	SCALE ----	SHEET 5 OF 5	

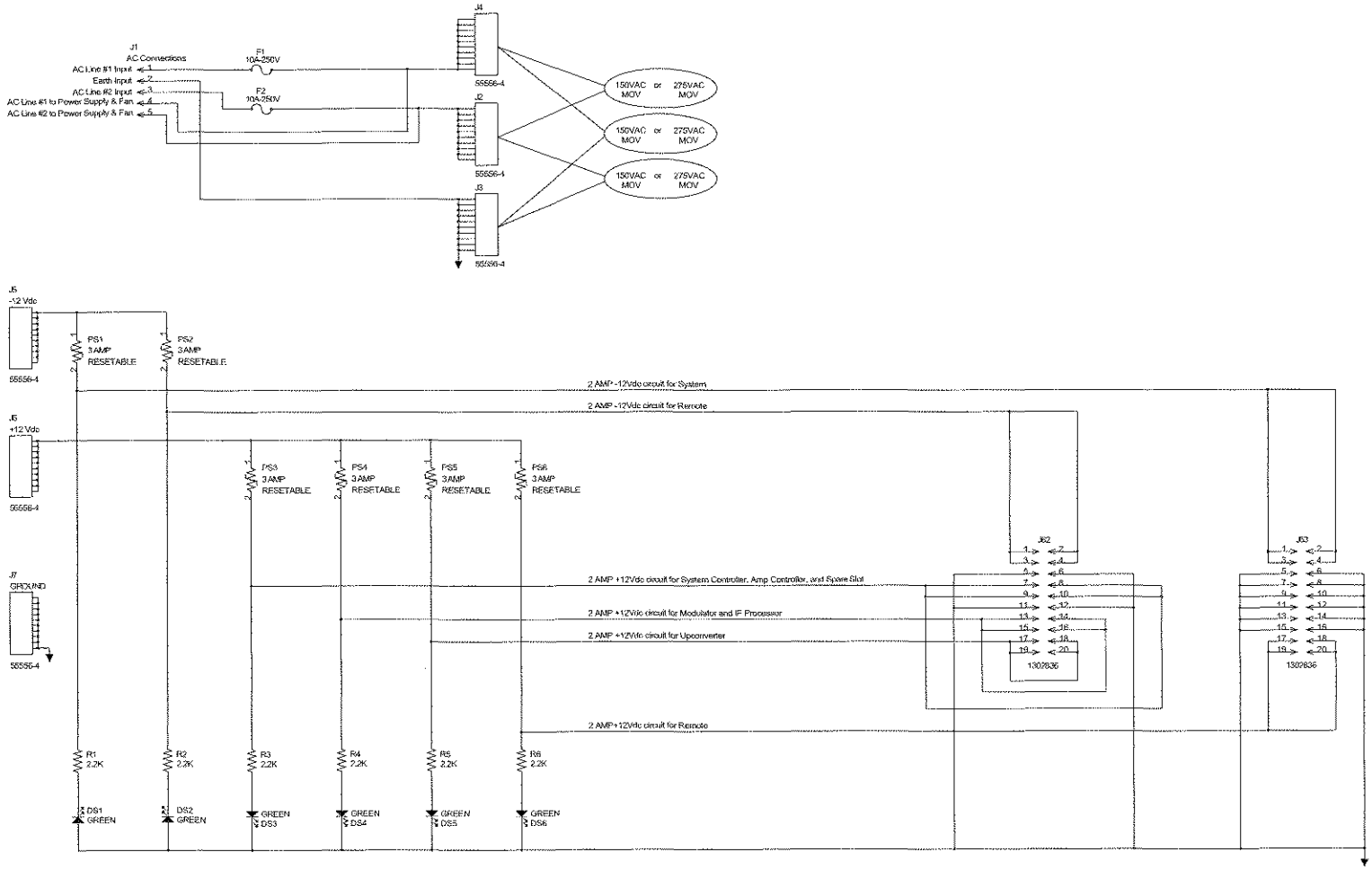

Circuit Design Notes:

1. Track widths of 0.140 inch minimum top and bottom of board shall be used to connections to J1, J2, J3, J4.
2. Track widths of 0.140 inch minimum top of board shall be used to connections to J5 and J6.
3. Track widths of 0.065 inch minimum shall be used to connections to J62 and J63.
4. Track widths of 0.020 inch minimum shall be used to connections between LEDs and resistors.
5. Board BOM needs the following items added to those exported from Orcad:

Part Number	Qty	Description
102071	4	Fuse Clip, PC BD Mnt., 15 Amp

MATERIAL NUMBERS:
1302837 PIONEER, POWER PROTECTION
1302838 PCB, PIONEER, PWR PROTECT
1302839 SCH, PIONEER, PWR PROTECT
1302840 STENCIL FOR 1302838

Axcera		REV	ECO	DATE	APV
THIS ASSET IS THE PROPERTY OF AXCERA, IT SHALL NOT BE COPIED WITHOUT PERMISSION	TITLE SCH, PIONEER, PWR PROTECT (1302837)				
MATERIAL ----	DWN REH 5/29/03	DWG. NO. 1302839			REV. AO
FINISH	CHK REH 5/29/03				
	REL REH 5/29/03	D	SCALE	SHEET 1 OF 1	

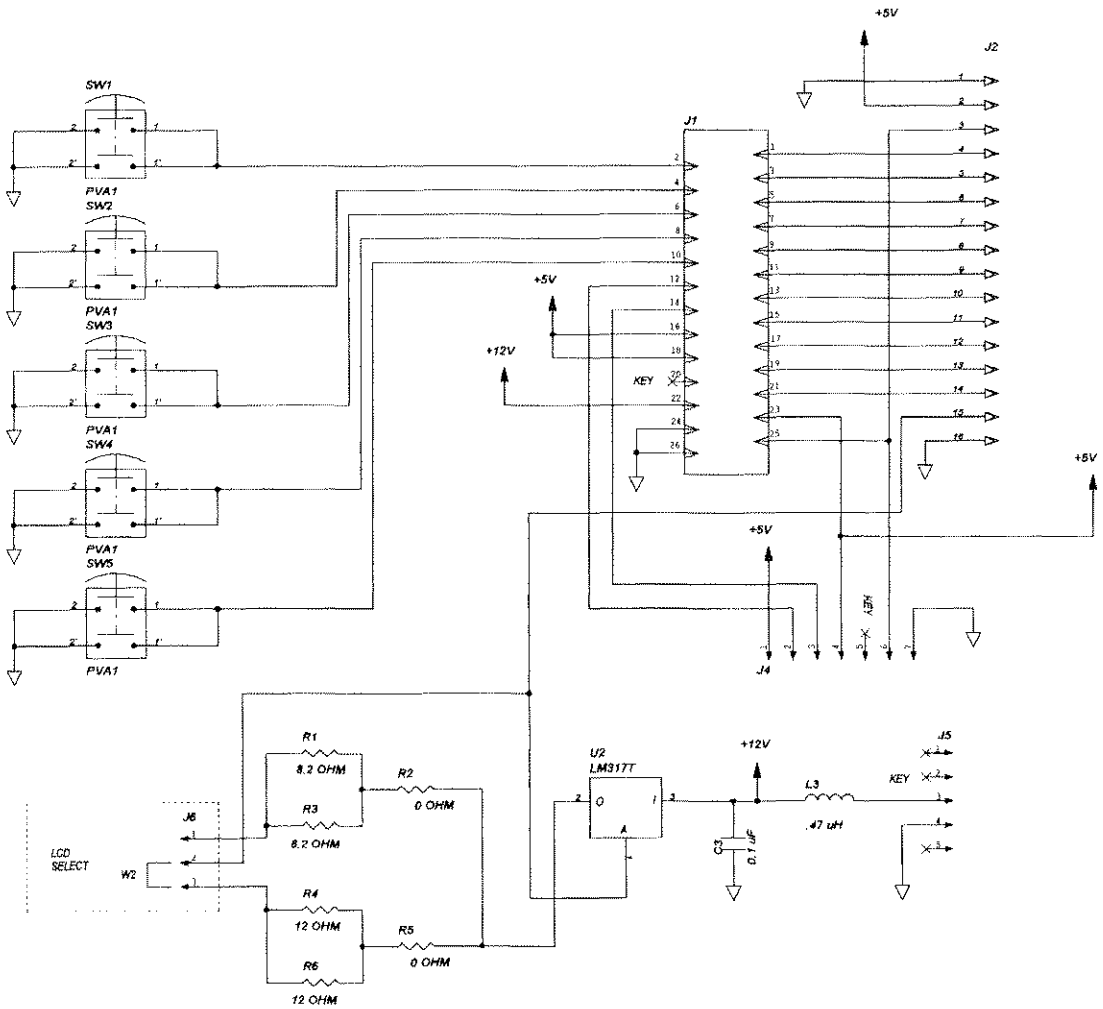

REV	ECN	DATE	APV
3	8603	11/7/96	JKF
	DELETED C1, C2, L1, L2, U1, J3, & W1. MOVED W2 FROM J6-1,-2 TO J6 -2,-3.		
2	8424	9/29/96	JCM
	AT J2 W2 WAS W1. (TMY)		
1	8368	8/27/96	RAS
	SWITCHED PINS 1 & 2 OF U2 (TMY)		

ITS CORPORATION

THIS PRINT IS THE PROPERTY OF ITS CORP IT SHALL NOT BE COPIED WITHOUT PERMISSION

MATERIAL ---

FINISH ---

TITLE SCHEMATIC SWITCH BOARD (1527-1406)

DWN	DLM	6/3/96	DWG. NO. 1527-3406	REV 3
CHK	RAS	6/14/96		
REL	RAS	6/14/96	B SCALE ---	SHEET 1 OF 1

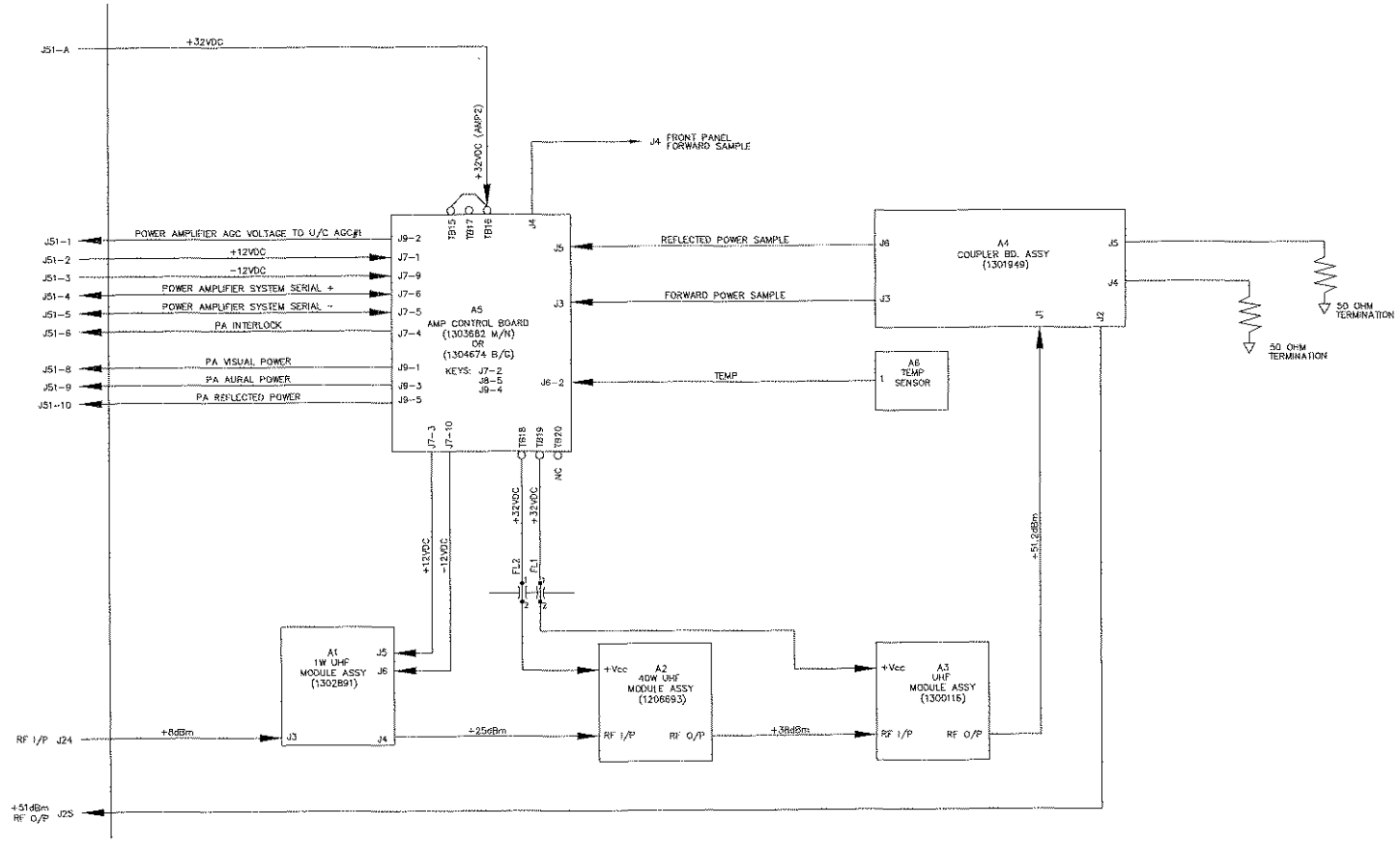

NOTE:
1. ALL POWER LEVELS ARE PK-SYNC +10% AURAL. FOR DTV LEVELS, SUBTRACT 3dBm.

REV	ECO	DATE	APV
A5 WAS 1301982. (RGE)			
C0	20011366h	2/15/04	RGE
AT A4, REVERSED J3 AND J6. (RGE)			
B0	20011245	5/7/04	LRT

Axcera.

THIS PRINT IS THE PROPERTY OF AXCERA, IT SHALL NOT BE COPIED WITHOUT PERMISSION.

MATERIAL ------

FINISH ------

TITLE B/D
PA ASSEMBLY, 100W
LX SERIES

DWN	RGF	01/16/04	
CHK	LRT	1/16/04	
REL	LRT	1/16/04	

DWG. NO. 1303850 REV C0

D SCALE ---- SHEET 1 OF 1

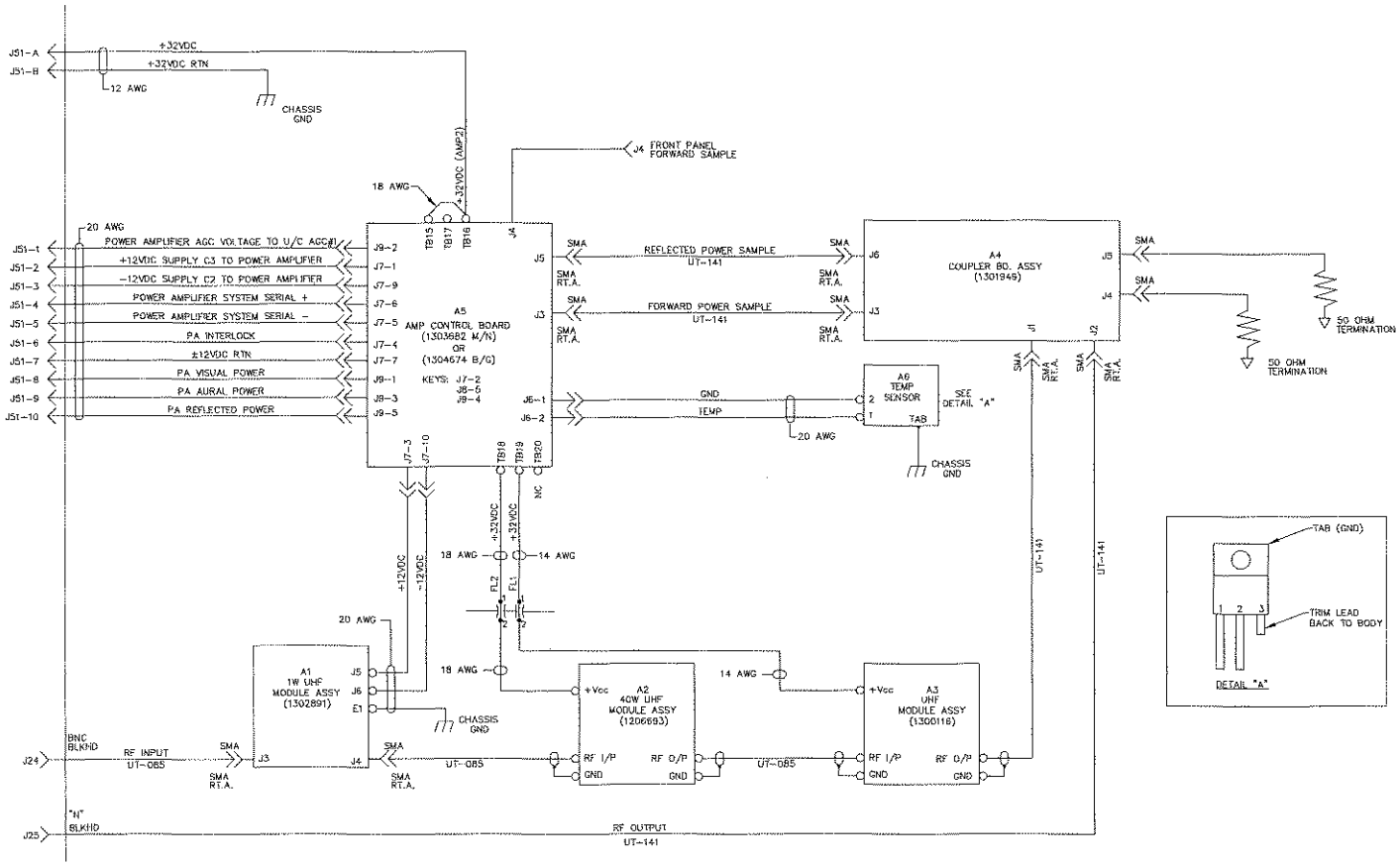

NOTE:
1. ALL WIRE IS 18AWG UNLESS OTHERWISE NOTED.

REV	ECO	DATE	APV
A5 WAS 1301962. (RGE)			
CO	20113268	2/16/04	REH
AT A4, REVERSED J5 AND J6. WIRE AT A5-J7-7 WAS 18 AWG. (RGE)			
B0	20113243	3/7/04	LRT

Axcera.

THIS PRINT IS THE PROPERTY OF AXCERA, IT SHALL NOT BE COPIED WITHOUT PERMISSION.

MATERIAL ------

FINISH ------

TITLE: I/C, PA ASSEMBLY, 100W LX SERIES

DWN	RGE	01/13/04	DWG. NO. 1303814
CHK	LRT	1/16/04	REV. CO
REL	LRT	1/16/04	D SCALE --- SHEET 1 OF 1

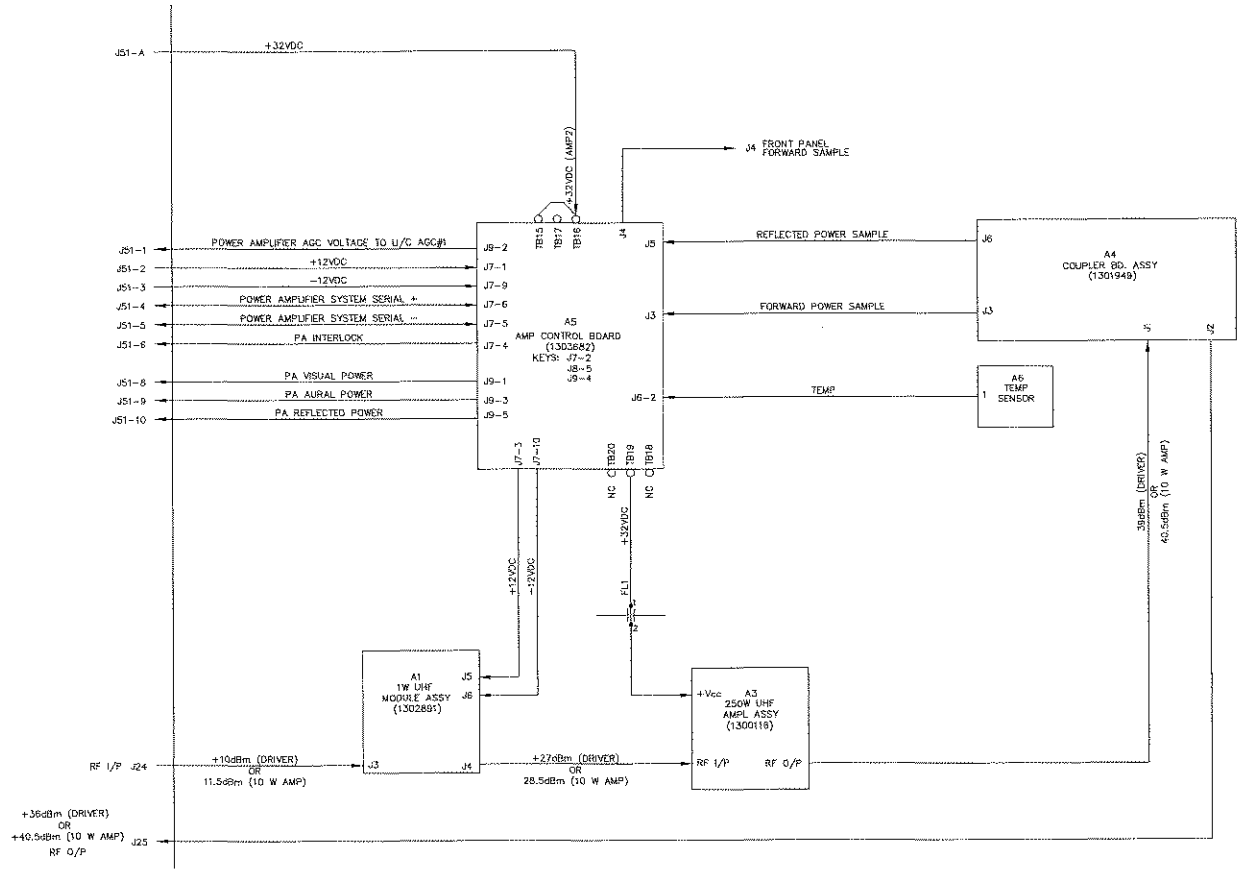

NOTE:
1. ALL POWER LEVELS ARE PK-SYNC +10% AURAL FOR DTV LEVELS, SUBTRACT 3dBm.

REV	ECO	DATE	APV
B0	2201247	3/1/05	LRT

A4 WAS 1227-1316.
ADDED REFLECTED SAMPLE FROM A4-J6 TO A5-J5.
ADDED AMPLIFIER POWER LEVELS. (SAK)

Axcera.

THIS PRINT IS THE PROPERTY OF AXCERA, IT SHALL NOT BE COPIED WITHOUT PERMISSION.

MATERIAL ——

FINISH ——

TITLE B/D
PA ASSEMBLY, 2KW DRIVER/ 10 W PA, LX SERIES

DWN	RCL	11/17/04	DWG. NO.	REV
CHK	LRT	11/18/04	1305138	B0
REL	LRT	11/18/04	D SCALE ----	SHEET 1 OF 1

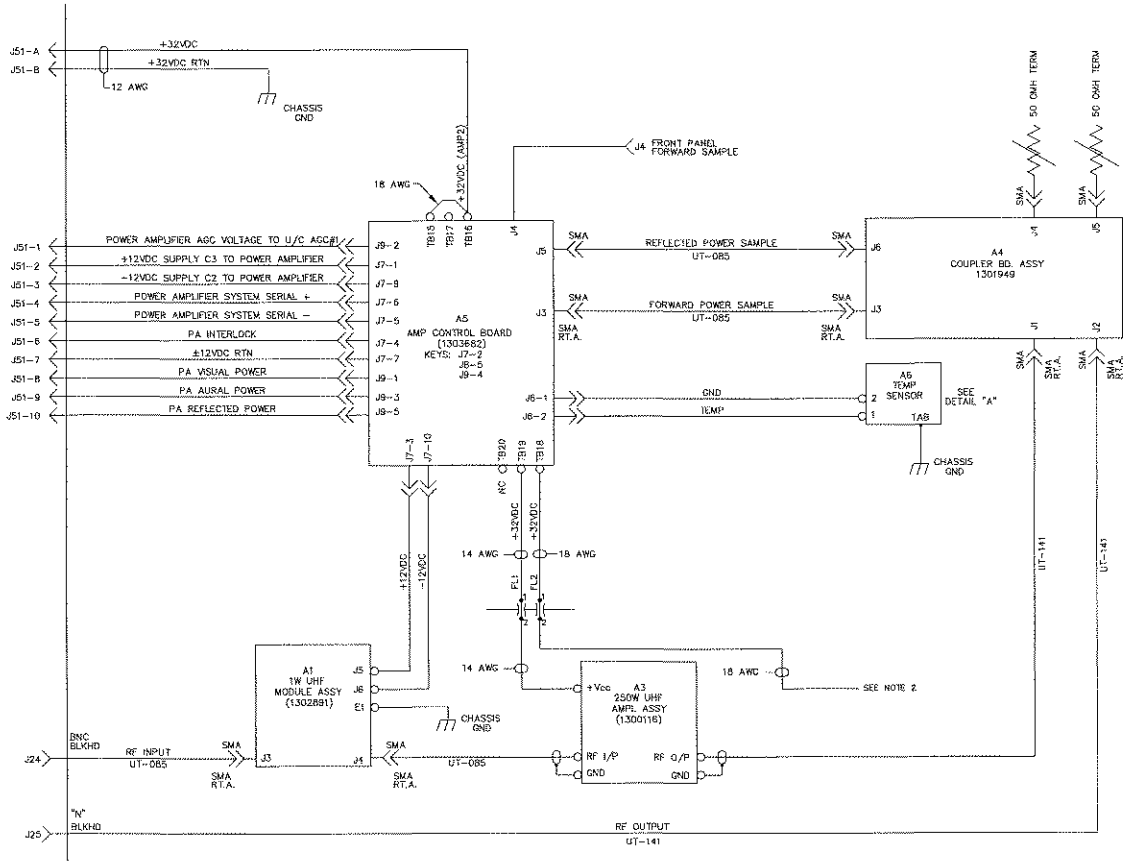

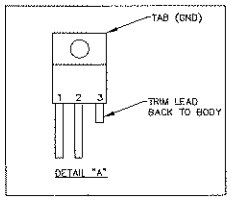

NOTE:
1. ALL WIRE IS 20AWG UNLESS OTHERWISE NOTED.
2. THIS WIRE IS NOT USED ON THIS ASSEMBLY. COVER THE END WITH HEAT SHRINKABLE TUBING AND TIE BACK IN THE HARNESS.

REV	ECO	DATE	APV
CO	06110347	3/1/06	LRT
BO	06112668	05/05/05	LRT

A4 WAS 1227-1316.
ADDED COAX FROM A4-J6 TO A5-J5.
ADDED 50 OHM TERMINATIONS AT A4. (SAK)

DELETED 50 OHM TERMINATION AT A5-J5. (RGE)

Axcera.

THIS PRINT IS THE PROPERTY OF AXCERA. IT SHALL NOT BE COPIED WITHOUT PERMISSION.

MATERIAL ———

FINISH ———

TITLE I/C, PA ASSEMBLY, 2KW DRIVER/ 10 W PA, LX SERIES

DWN	RGE	11/17/04
CHK	LRT	11/18/04
REL	LRT	11/18/04

DWG. NO. 1305137 REV CO

D SCALE ---- SHEET 1 OF 1

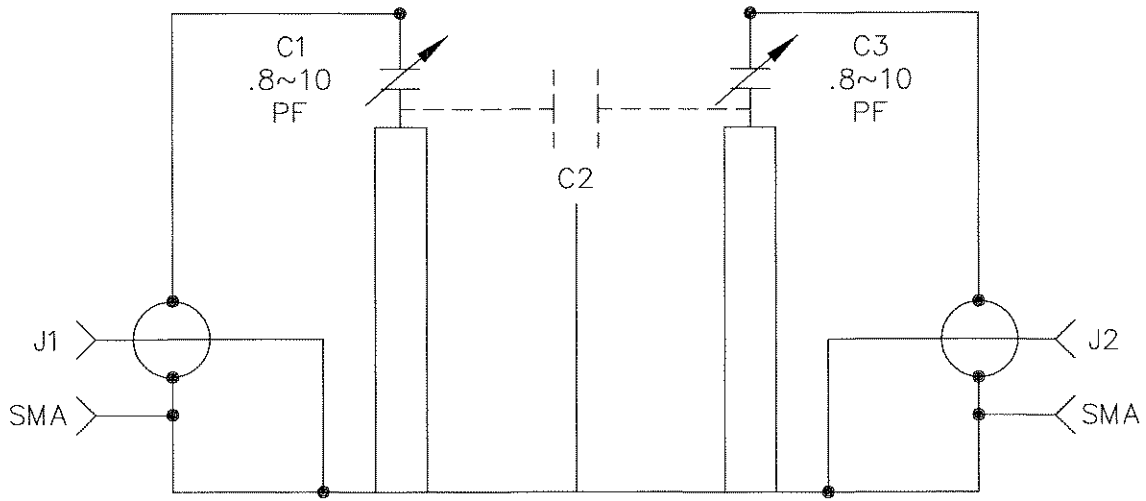

NOTE: C2 IS STRAY CAPACITANCE BETWEEN LINE SECTIONS.

REV	ECO	DATE	APV

Axcera®

THIS PRINT IS THE PROPERTY OF AXCERA, IT SHALL NOT BE COPIED WITHOUT PERMISSION.

MATERIAL
— — — —

FINISH
— — — —

TITLE SCHEMATIC — UHF FILTER

DWN	DD	9/13/83	DWG. NO. 1007-3101	REV 0
CHK	RWZ	9/13/83		
REL	RWZ	7/20/90	A SCALE — —	SHEET 1 OF 1

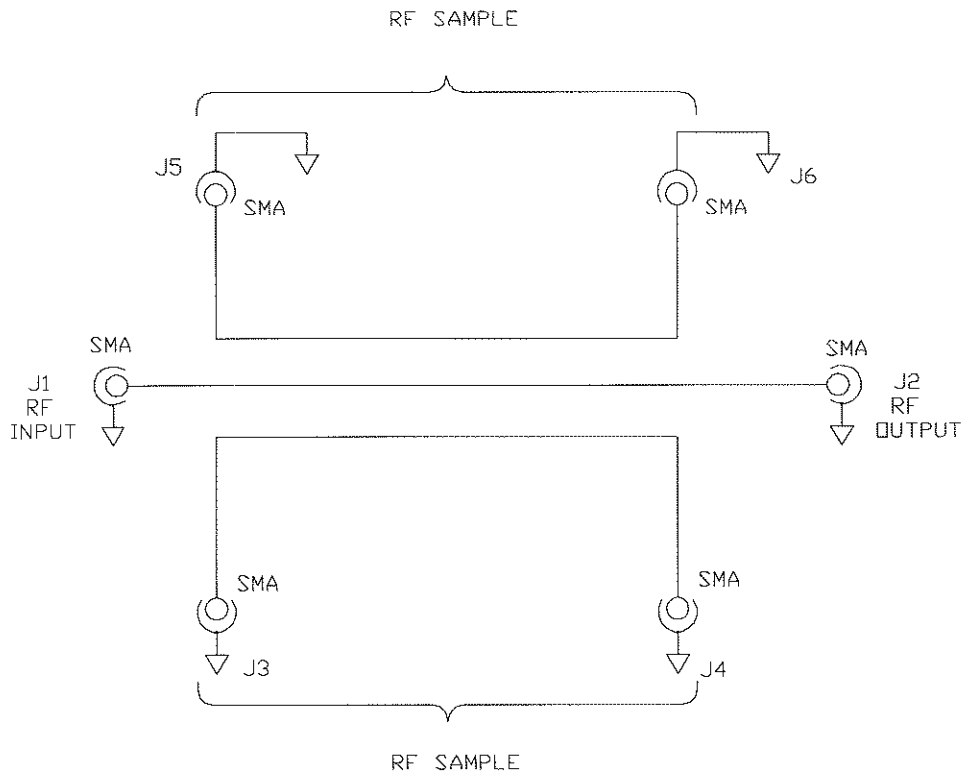

REV	ECO	DATE	APV

Axcera®

THIS PRINT IS THE PROPERTY OF AXCERA, IT SHALL NOT BE COPIED WITHOUT PERMISSION.

MATERIAL — — — —

FINISH — — — —

TITLE SCHEMATIC DIRECTIONAL COUPLER BOARD

DWN	MH	8/11/03	DWG. NO. 1303152	REV A0
CHK	JCM	8/25/03		
REL	JCM	8/25/03	B SCALE ---	SHEET 1OF1

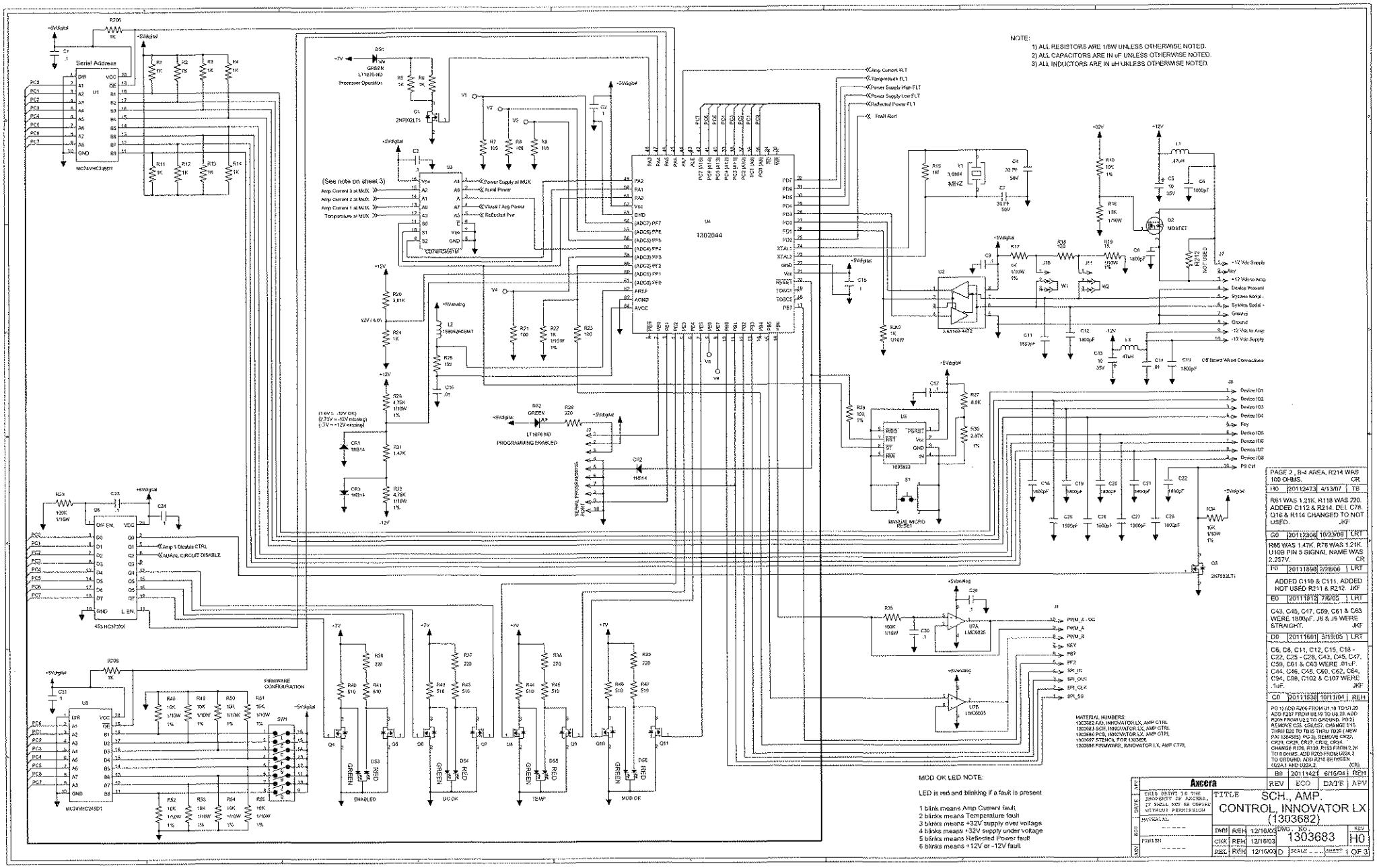
NOTE:
1) ALL RESISTORS ARE 1/8W UNLESS OTHERWISE NOTED.
2) ALL CAPACITORS ARE IN uF UNLESS OTHERWISE NOTED.
3) ALL INDUCTORS ARE IN uH UNLESS OTHERWISE NOTED.
Serial Address
MC74VHC245DT
(See note on sheet 3)
Amp Current 3 at MUX
Amp Current 2 at MUX
Amp Current 1 at MUX
Temperature at MUX
Power Supply at MUX
Aural Power
Visual / Avg Power
Reflected Pwr
CD74HC4051M
1302044
Processor Operation
PROGRAMMING ENABLED
SERIAL PROGRAMMING PORT
MANUAL MICRO RESET
Amp Current FLT
Temperature FLT
Power Supply High FLT
Power Supply Low FLT
Reflected Power FLT
Fault Alert
MOSFET
Off Board Wired Connections
Amp 1 Disable CTRL
AURAL CIRCUIT DISABLE
FIRMWARE CONFIGURATION
ENABLED
DC OK
TEMP
MOD OK
MOD OK LED NOTE:
LED is red and blinking if a fault is present
1 blink means Amp Current fault
2 blinks means Temperature fault
3 blinks means +32V supply over voltage
4 blinks means +32V supply under voltage
5 blinks means Reflected Power fault
6 blinks means +12V or -12V fault
MATERIAL NUMBERS:
1303682 ASD, INNOVATOR LX, AMP CTRL
1303683 SCH, INNOVATOR LX, AMP CTRL
1303680 PCB, INNOVATOR LX, AMP CTRL
1400697 STENCIL FOR UNDER
1303686 FIRMWARE, INNOVATOR LX, AMP CTRL
PAGE 2 , B-4 AREA, R214 WAS 100 OHMS. CR
H0 20112473 4/13/07 TB
R61 WAS 1.21K, R118 WAS 220. ADDED C112 & R214. DEL C78, C16 & R114 CHANGED TO NOT USED. JKF
G0 20112306 10/23/06 LRT
R65 WAS 1.47K, R78 WAS 1.21K. U109 PIN 5 SIGNAL NAME WAS 2.257V. CR
F0 20111898 2/28/06 LRT
ADDED C110 & C111. ADDED NOT USED R211 & R212. JKF
E0 20111812 7/6/05 LRT
C43, C45, C47, C59, C61 & C63 WERE 18/00pF, J6 & J9 WERE STRAIGHT. JKF
D0 20111501 3/15/05 LRT
C6, C8, C11, C12, C15, C18 - C22, C25 - C28, C43, C45, C47, C59, C61 & C63 WERE .01uF. C44, C46, C48, C60, C62, C64, C94, C98, C102 & C107 WERE .1uF. JKF
C0 20111638 10/11/04 REH
PG 1) ADD R206 FROM U1.19 TO U1.20 ADD R207 FROM U8.19 TO U8.20 ADD R208 FROM U2.2 TO GROUND. PG 2) REMOVE C55, C56,C57. CHANGE R15 THRU R20 TO TB-15 THRU TB20 (NEW P/N 1304565) PG 3). REMOVE CR22, CR23, CR25, CR27, CR32, CR34. CHANGE R126, R139, R153 FROM 2.2K TO 8 OHMS. ADD R205 FROM U22A.2 TO GROUND. ADD R213 BETWEEN U22A.1 AND U22A.2. (CR)
B0 20111421 6/16/04 REH
Axcera
REV ECO DATE APV
THIS DRAWING IS THE PROPERTY OF AXCERA, IT SHALL NOT BE COPIED WITHOUT PERMISSION
TITLE SCH., AMP. CONTROL, INNOVATOR LX (1303682)
DWN REH 12/16/03
CHK REH 12/16/03
APV REH 12/16/03
DWG. NO. 1303683
REV H0
SCALE
SHEET 1 OF 3

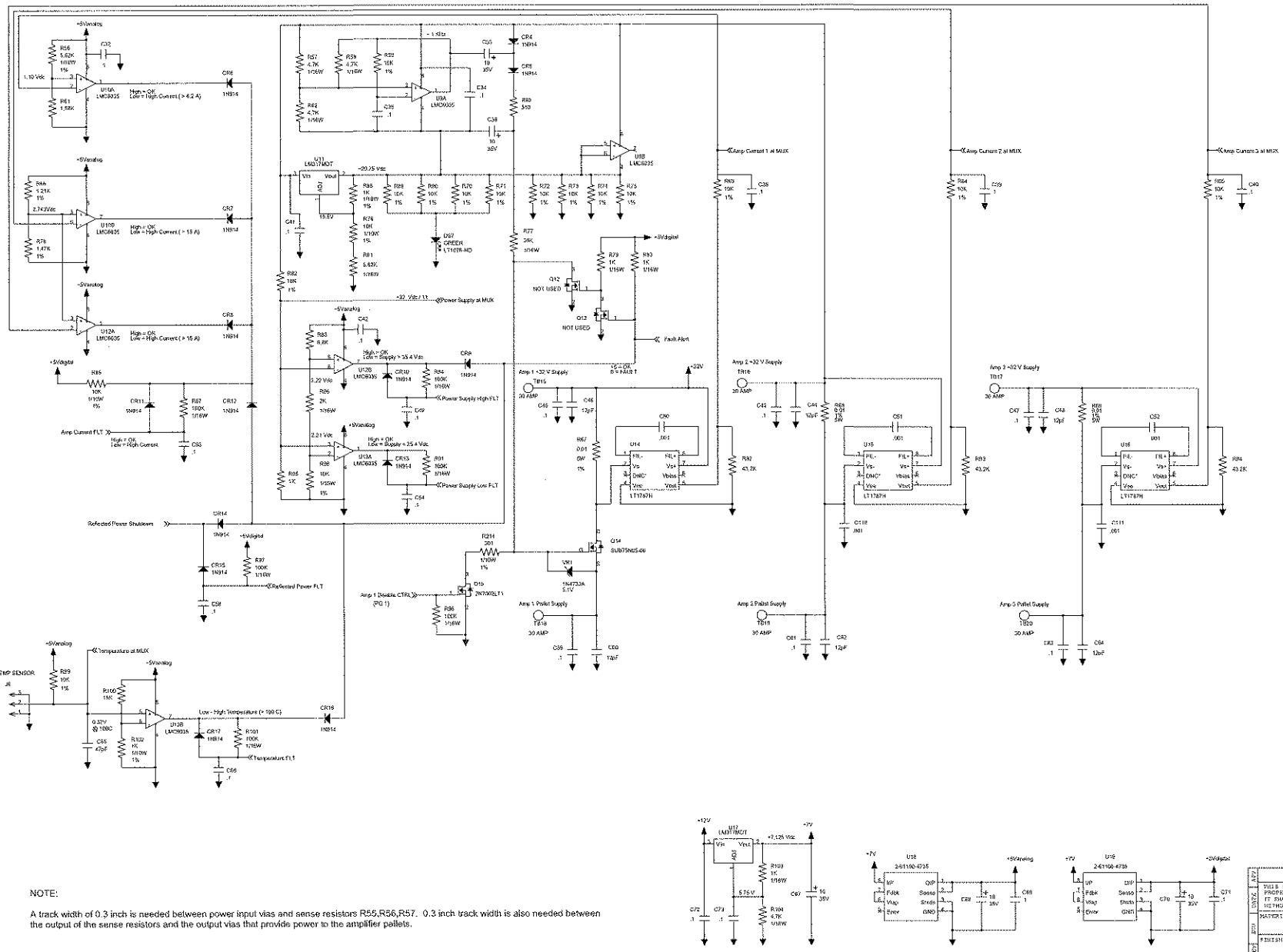

NOTE:

A track width of 0.3 inch is needed between power input vias and sense resistors R55,R56,R57. 0.3 inch track width is also needed between the output of the sense resistors and the output vias that provide power to the amplifier pellets.

Axcera		REV	ECO	DATE	APV
THIS PRINT IS THE PROPERTY OF AXCERA, IT SHALL NOT BE COPIED WITHOUT PERMISSION	TITLE SCH., AMP. CONTROL, INNOVATOR LX (1303682)				
MATERIAL	DWN REH 12/16/03	DWG. NO. 1303683		REV H0	
FINISH	CHK REH 12/16/03				
	SEQ. REH 12/16/03	SCALE		SHEET 2 OF 3	

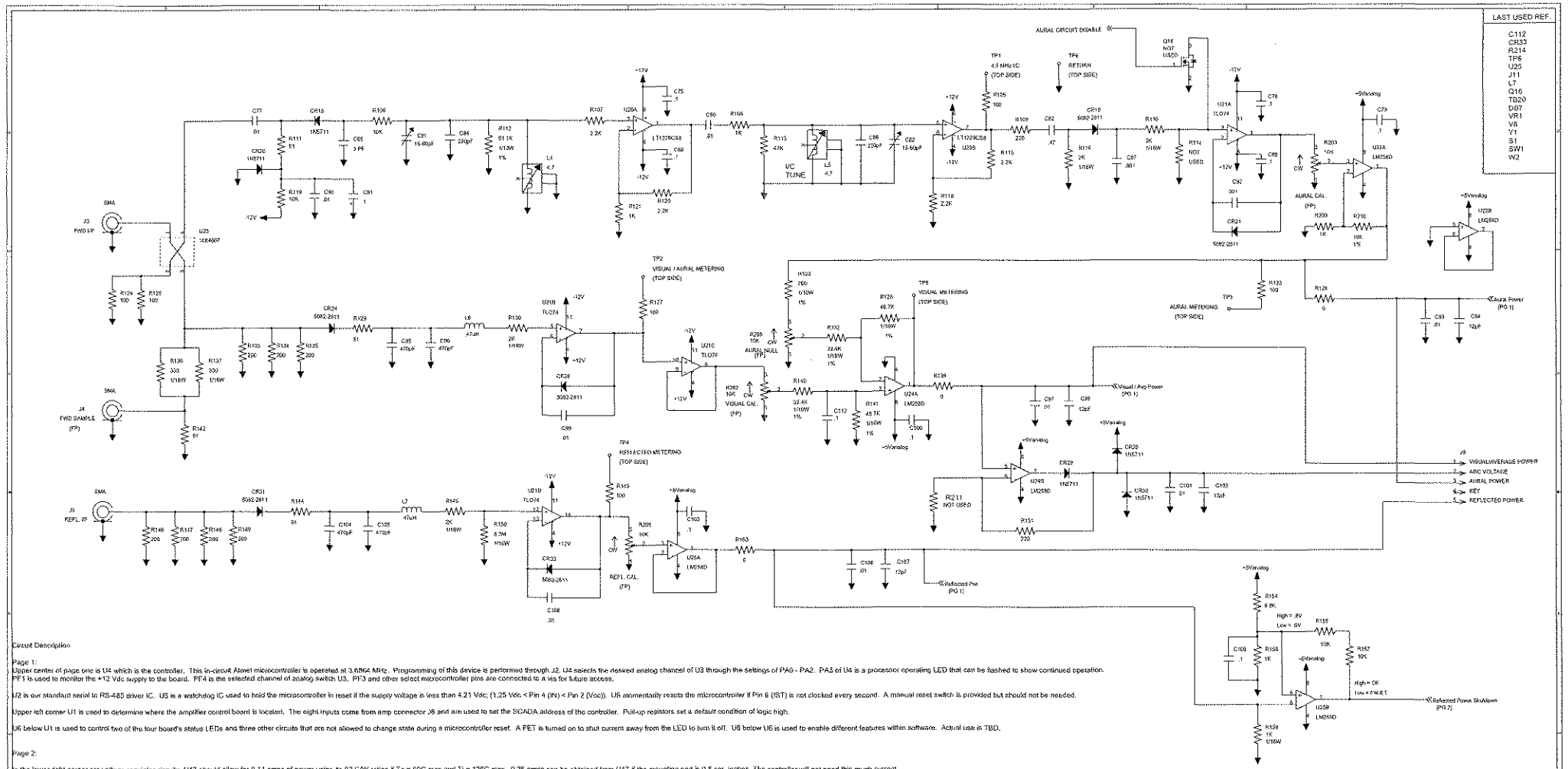

Circuit Description

Page 1:

Upper center of page one is U4 which is the controller. This in-circuit Atmel microcontroller is operated at 3.6864 MHz. Programming of this device is performed through J2. U4 selects the desired analog channel of U3 through the settings of PA0 - PA2. PA3 of U4 is a processor operating LED that can be flashed to show continued operation. PF1 is used to monitor the +12 Vdc supply to the board. PF4 is the selected channel of analog switch U3. PF3 and other select microcontroller pins are connected to a via for future access.

U2 is our standard serial to RS-485 driver IC. U5 is a watchdog IC used to hold the microcontroller in reset if the supply voltage is less than 4.21 Vdc; (1.25 Vdc < Pin 4 (IN) < Pin 2 (Vcc)). U5 momentarily resets the microcontroller if Pin 6 (IST) is not clocked every second. A manual reset switch is provided but should not be needed.

Upper left corner U1 is used to determine where the amplifier control board is located. The eight inputs come from amp connector J6 and are used to set the SICADA address of the controller. Pull-up resistors set a default condition of logic high.

U6 below U1 is used to control two of the four board's status LEDs and three other circuits that are not allowed to change state during a microcontroller reset. A FET is turned on to shut current away from the LED to turn it off. U6 below U6 is used to enable different features within software. Actual use is TBD.

Page 2:

In the lower right corner are voltage regulator circuits. U17 should allow for 0.14 amps of power using its 92 C/W rating if Ta = 60C max and Tj = 125C max. 0.25 amps can be obtained from U17 if the mounting pad is 0.5 sqr. inches. The controller will not need this much current.

U18 and U19 are low drop-out voltage regulators with a tolerance greater than or equal to 1%. 100 mA is available from each device but again the controller will not need this much current.

In the upper left section are circuits with U9 and U11. U11 is used to generate a regulated voltage that is about 5 Volts less than the +32 Volt supply. When the +32 Volt supply is enabled, the circuitry around U9A is used to provide gate voltage to Q14 that is 5 volts greater than the source pin of this FET. The gate of Q14 can be turned off by any one of a few different circuits. These circuits are wired through Q12 and Q13. At this time these transistors are not installed but they may be installed to increase the shut-down time on a detected fault. Without Q12 and Q13 installed, Q14 is only turned off by the microcontroller through Q16.

U10A is used to detect high current in amplifier #1. At 1.10 Vdc, the current to amplifier #1 should be about 6.20 Amps. U10B and U12A are used to detect a high current condition in amplifier stages #2 or #3. With a 2.74 Vdc reference, high current shut down should be about 15 Amps.

U12B is used to detect high power supply voltage. U13A is used to indicate that the power supply voltage is less than 26 volts.

U25B on page 3 is used to detect high reflected power. U13B determines if the power supply temperature gets too hot.

Current Monitoring Sections - A 0.01 ohm 1% 5 Watt thru-hole resistor is used for monitoring the current through several sections of the amplifier. The voltage developed across this resistor is amplified for current monitoring by U14, U15, or U16. The Linear Technology LT1787HVCS8 precision high side current sense amplifier accepts a maximum voltage of 60 Vdc. The 49.9 Kohm resistor from Pin 5 to ground sets the gain of the amplifier to about 17.26. This value is not set with much accuracy since the manufacture internal matches the resistors of this part but their actual resistance value is not closely defined. A trimming resistor is suggested to give a temperature stability of -200ppm/C but instead the microcontroller will determine the exact gain of the circuit and use a correction factor for measurements.

Page 3:

RF power detector circuits. Q16 is used by the microcontroller to disable the aural circuit of a digital transmitter or in external amplifiers where the amplifier is not to monitor visual power.

The Visual or Forward power circuit is calibrated and presented on the input of U24B pin 5. If this module has the highest detected forward power in a multi-amplifier system, it will have the highest forward power signal. This signal level into U24B pin 5 will be used to set the AGC output voltage of J9-2. If another amplifier has a higher forward power, the level into U24B pin 6 will be higher than pin5 and this amplifiers output signal will not be used to set the voltage level of J9-2.

Axcera	REV	ECO	DATE	APV	
THIS PRINT IS THE PROPERTY OF AXCERA, IT SHALL NOT BE COPIED WITHOUT PERMISSION	TITLE SCH., AMP. CONTROL, INNOVATOR LX (1303682)				
MATERIAL ----	DWN REH 12/16/03	DWG. NO. 1303683		REV H0	
FINISH ----	CHK REH 12/16/03				
	ISS. REH 12/16/03 D	SCALE ---	SHEET 3 OF 3		

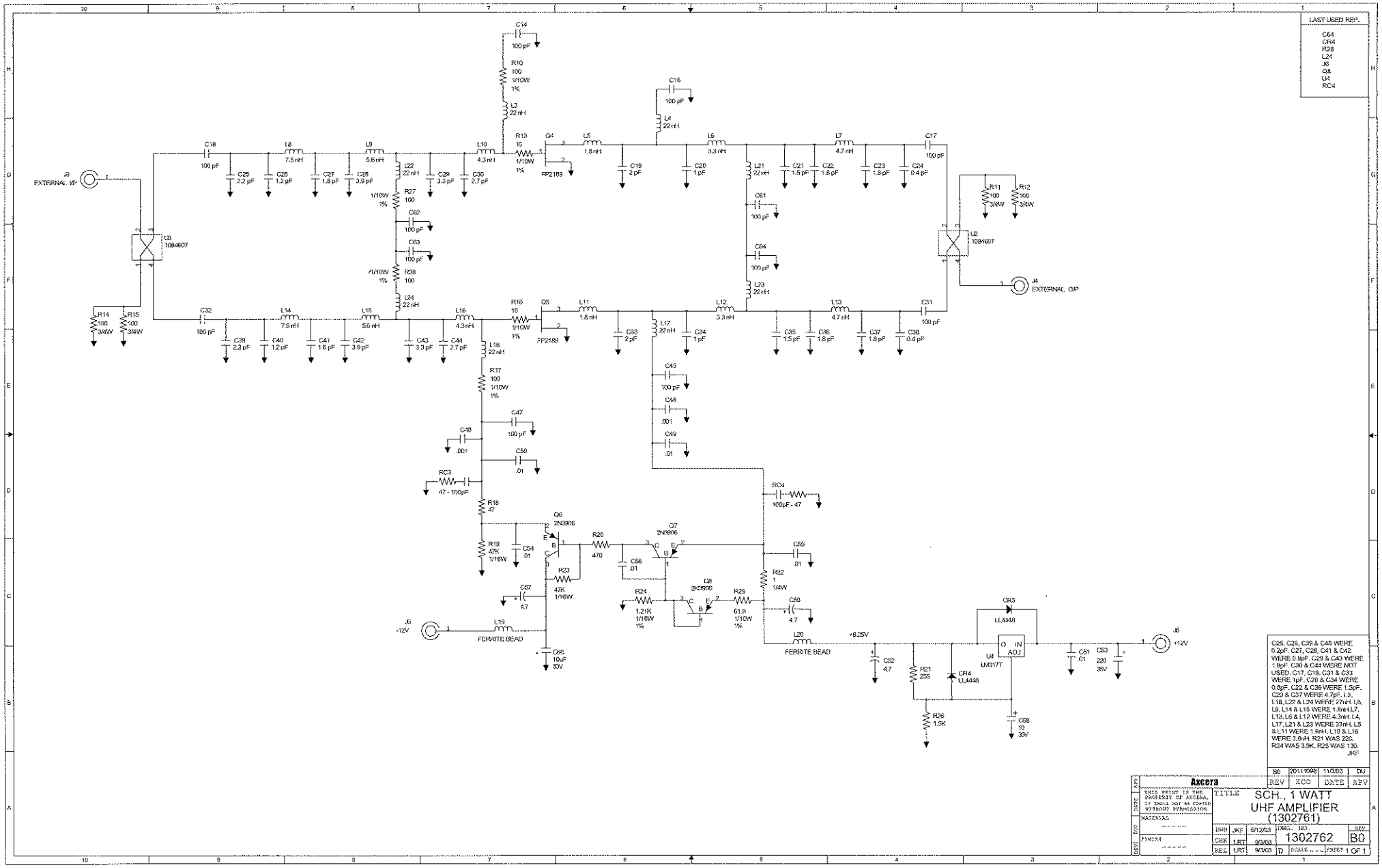

C25, C26, C39 & C40 WERE 0.2pF. C27, C28, C41 & C42 WERE 0.9pF. C29 & C43 WERE 1.8pF. C30 & C44 WERE NOT USED. C17, C19, C31 & C33 WERE 1pF. C20 & C34 WERE 0.8pF. C22 & C36 WERE 1.5pF. C23 & C37 WERE 4.7pF. L3, L18, L22 & L24 WERE 27nH. L8, L9, L14 & L15 WERE 1.6nH. L7, L13, L6 & L12 WERE 4.3nH. L4, L17, L21 & L23 WERE 33nH. L5 & L11 WERE 1.6nH. L10 & L16 WERE 3.9nH. R21 WAS 220. R24 WAS 3.9K. R26 WAS 130.
JKF

REV	ECO	DATE	APV
B0	20111098	11/3/03	OJ

Axcera

THIS PRINT IS THE PROPERTY OF AXCERA, IT SHALL NOT BE COPIED WITHOUT PERMISSION

MATERIAL

FINISH

TITLE SCH., 1 WATT UHF AMPLIFIER (1302761)

DWN	JKF	6/12/03	
CHK	LRT	9/2/03	
REL	LRT	9/3/03	D

DWG. NO. 1302762 REV B0

SCALE SHEET 1 OF 1

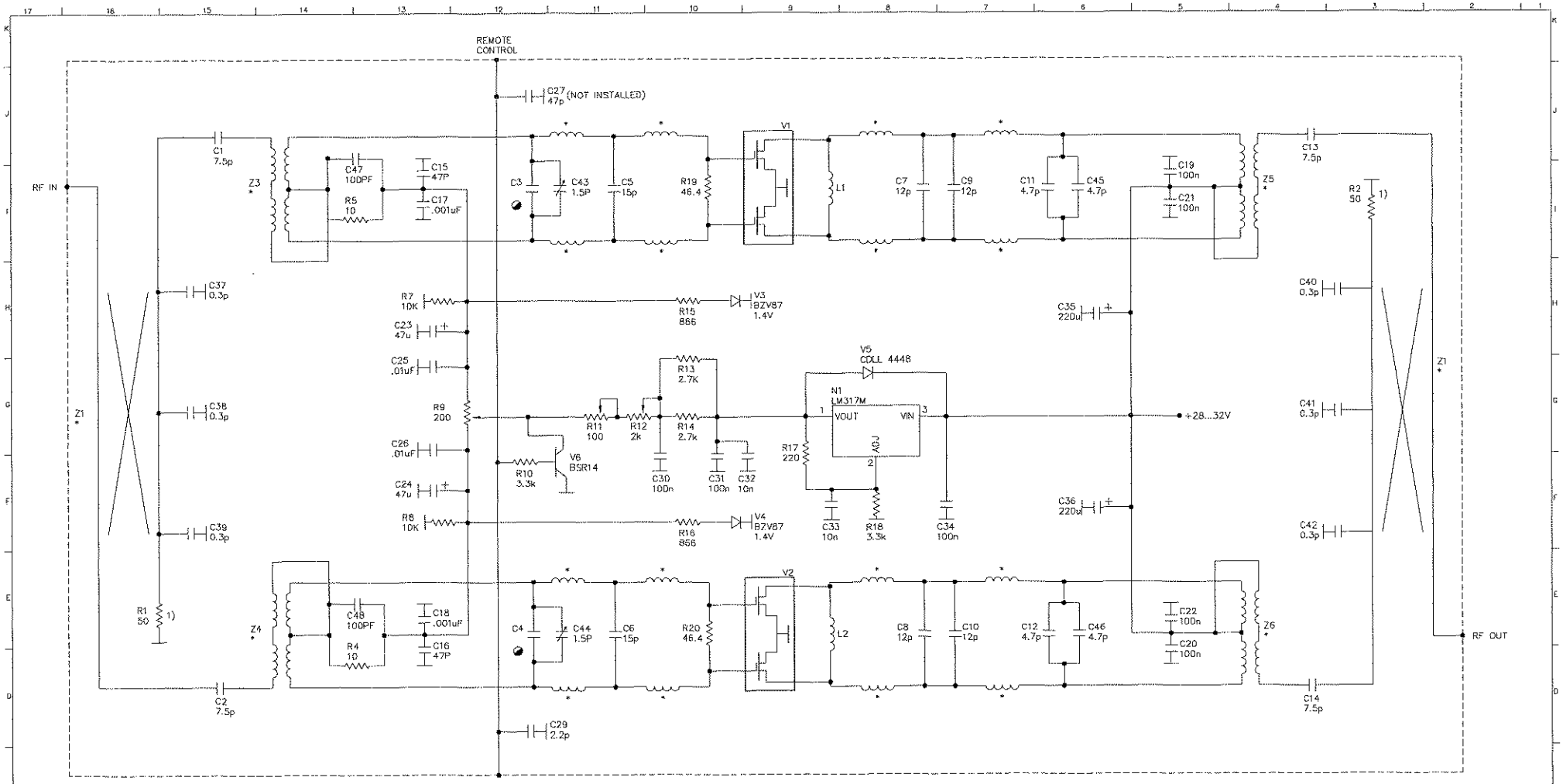

* PRINTED COMPONENT

FACTORY SET VALUE

PC BOARD LAYOUT SEE
51-5379-309-00 (2)

REV	ECO	DATE	APV
00	20030634	04/02/02	LRT
CO	20011021	5/17/02	RE

DELETED PTF10159 P/N FROM LDMOS. ADDED C23,C24 & C27. COD/CR

R15 AND R16 WERE 680 OHMS. PWK

REV	ECO	DATE	APV
00	20030634	04/02/02	LRT
01	20030634	04/02/02	RJ
02	20030634	04/02/02	RJ

R15 & R16 WERE 820 OHM. JKC
FOR 20030634 / 20011021 RE
ADD WIRE JUMPER. JKC
CHANGE R3 FROM A 2.2 OHM RESISTOR TO C47, SM., CAP., 100PF, 50WVDC. CHANGE R6 FROM A 2.2 OHM RESISTOR TO C48, SM., CAP., 100PF, 50WVDC. CHANGE R4 FROM A 2.2 OHM RESISTOR TO 1-159900003SMT, SM., RES., 10 OHM 5%
1-REW CHANGE R5 FROM A 2.2 OHM RESISTOR TO 1-159900003SMT, SM., RES., 10 OHM 5%
1-REW CHANGE C17 FROM A 47PF CAP., FIXED CERAMIC, 47 PF TO 1-159061503MT, SM., CAP., .001 UF, 50 WVDC
CHANGE C18 FROM A 47PF CAP., FIXED CERAMIC, 47 PF TO 1-159061503MT, SM., CAP., .001 UF, 50 WVDC
CHANGE C23, C24, C25, C26 FROM 1-301145, SM. CAP., 47MF, 50V, LOW ESR
CHANGE C15, C16, C17, C18 TO 1-301143, SM. CAP., 47MF, 50V, LOW ESR
CHANGE C25, C26 TO 1-159061815MT, SM., CAP., .01 UF, 50 WVDC
CHANGE C16, C18 TO 1-159061815MT, SM., CAP., .01 UF, 50 WVDC. PWK

Axcera.

THIS PRINT IS THE PROPERTY OF AXCERA, IT SHALL NOT BE COPIED WITHOUT PERMISSION.

MATERIAL

FINISH

DWN	PWK	04/01/02	
CHK	LRT	04/03/02	
REL	LRT	04/03/02	

TITLE AMPLIFIER MODULE

DWG. NO. 51-5379-309-00 WSH

REV F0

SCALE

SHEET 1 OF 1