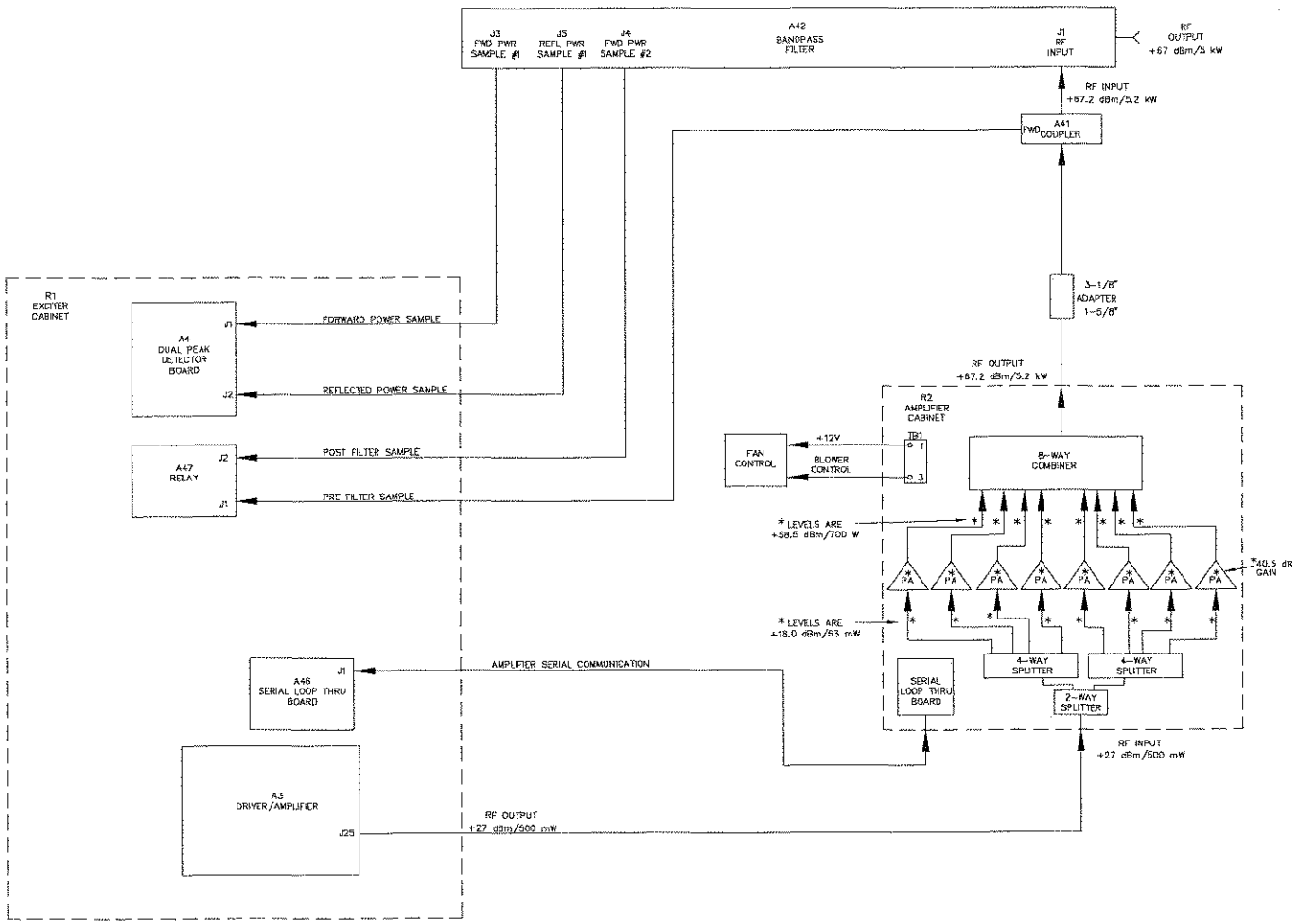

REV	ECO	DATE	APV

Axcera.

THIS PRINT IS THE PROPERTY OF AXCERA. IT SHALL NOT BE COPIED WITHOUT PERMISSION.

MATERIAL - - - -

FINISH - - - -

TITLE B/D, SYSTEM, HU5000AD, UHF DIGITAL, SINGLE EXCITER, HX SERIES

			DWG. NO.	REV
DWN	CDD	6/25/08	1310994	AD
CHK	LRT	6/25/08		
REL	LRT	6/25/08	D SCALE - -	SHEET 1 OF 1

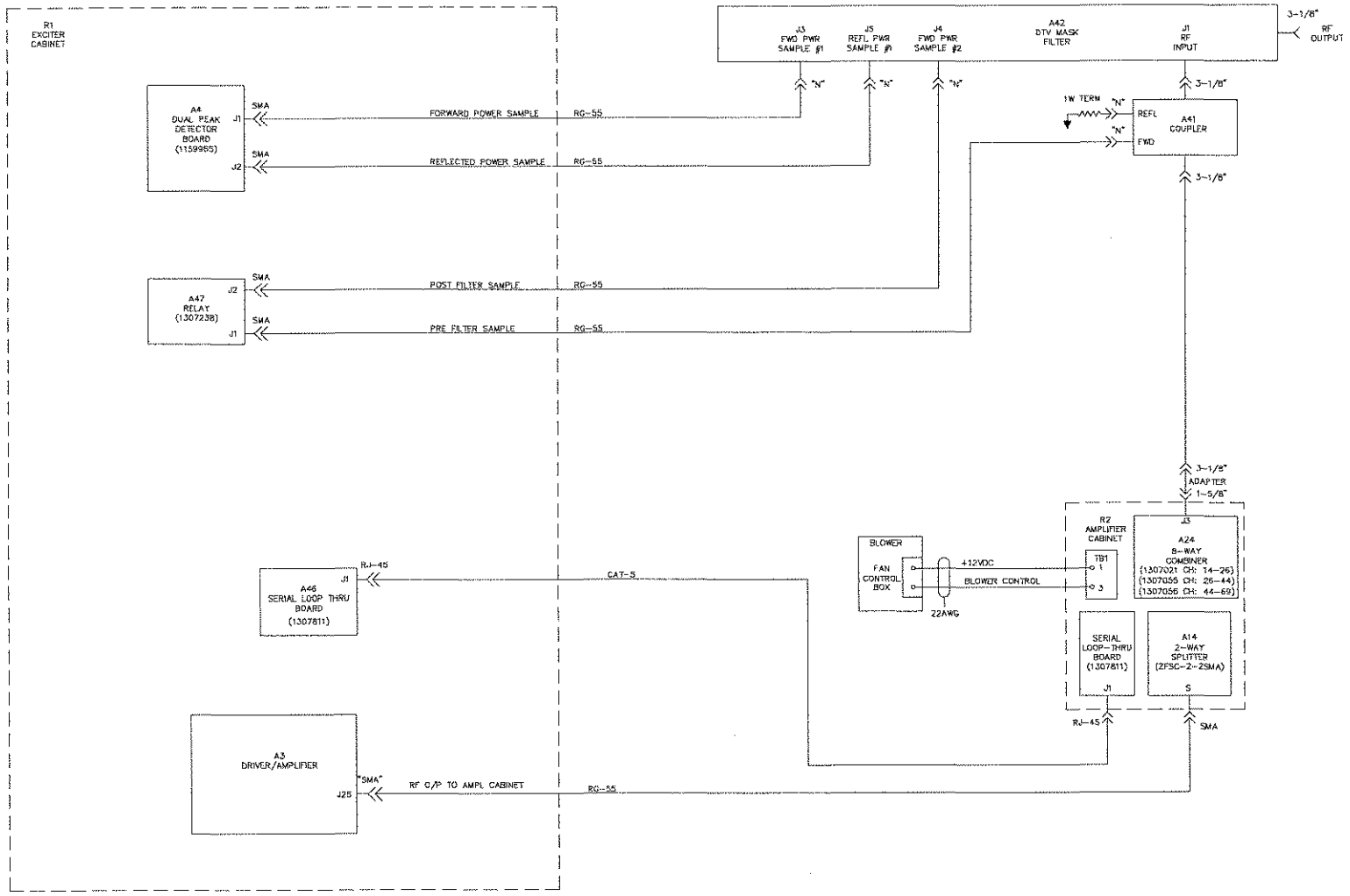

REV	ECO	DATE	APV

Axcera.

THIS PRINT IS THE PROPERTY OF AXCERA. IT SHALL NOT BE COPIED WITHOUT PERMISSION.

MATERIAL ----

FINISH ----

TITLE I/C, SYSTEM, HU5000AD, UHF DIGITAL, SINGLE EXCITER, HX SERIES

DWN	CDD	6/25/08	DWG. NO. 1310995 REV A0
CHK	LRT	6/25/08	
REL	LRT	6/25/08	D SCALE --- SHEET 1 OF 1

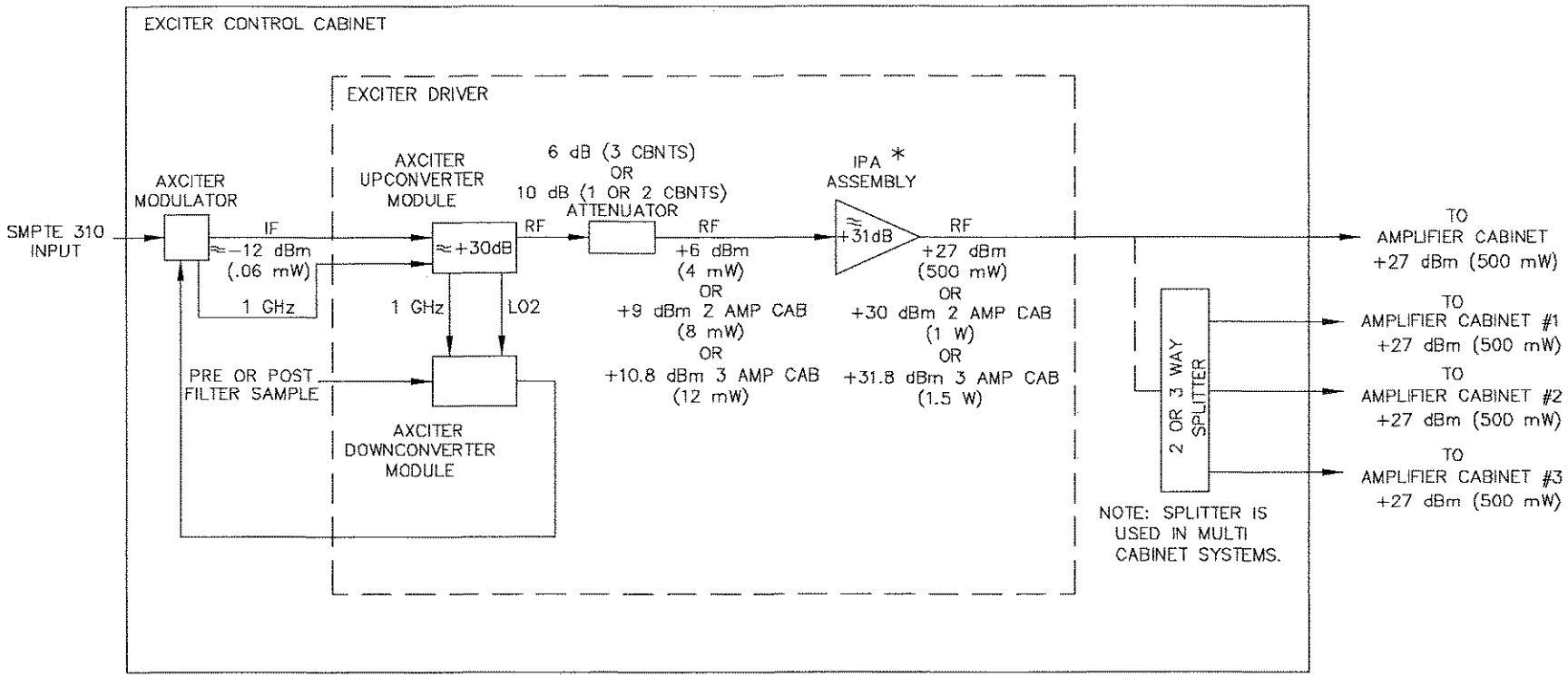

*NOTE:
THE GAIN OF THE IPA ASSEMBLY WILL VARY WITH FREQUENCY, THEREFORE THE OUTPUT LEVEL OF THE AXCITER WILL VARY AS NEEDED.

≈ IS THE SYMBOL FOR APPROXIMATELY.

REV	ECO	DATE	APV

Axcera®

THIS PRINT IS THE PROPERTY OF AXCERA, IT SHALL NOT BE COPIED WITHOUT PERMISSION.

MATERIAL — — — —

FINISH — — — —

TITLE B/D – HX UHF SINGLE EXCITER CBNT, w/AXCITER, 1, 2 OR 3 AMP CBNTS

DWN	CDD	10/19/06	DWG. NO. 1308241	REV A0
CHK	LRT	10/23/06		
REL	LRT	10/23/06	B SCALE – –	SHEET 1 OF 1

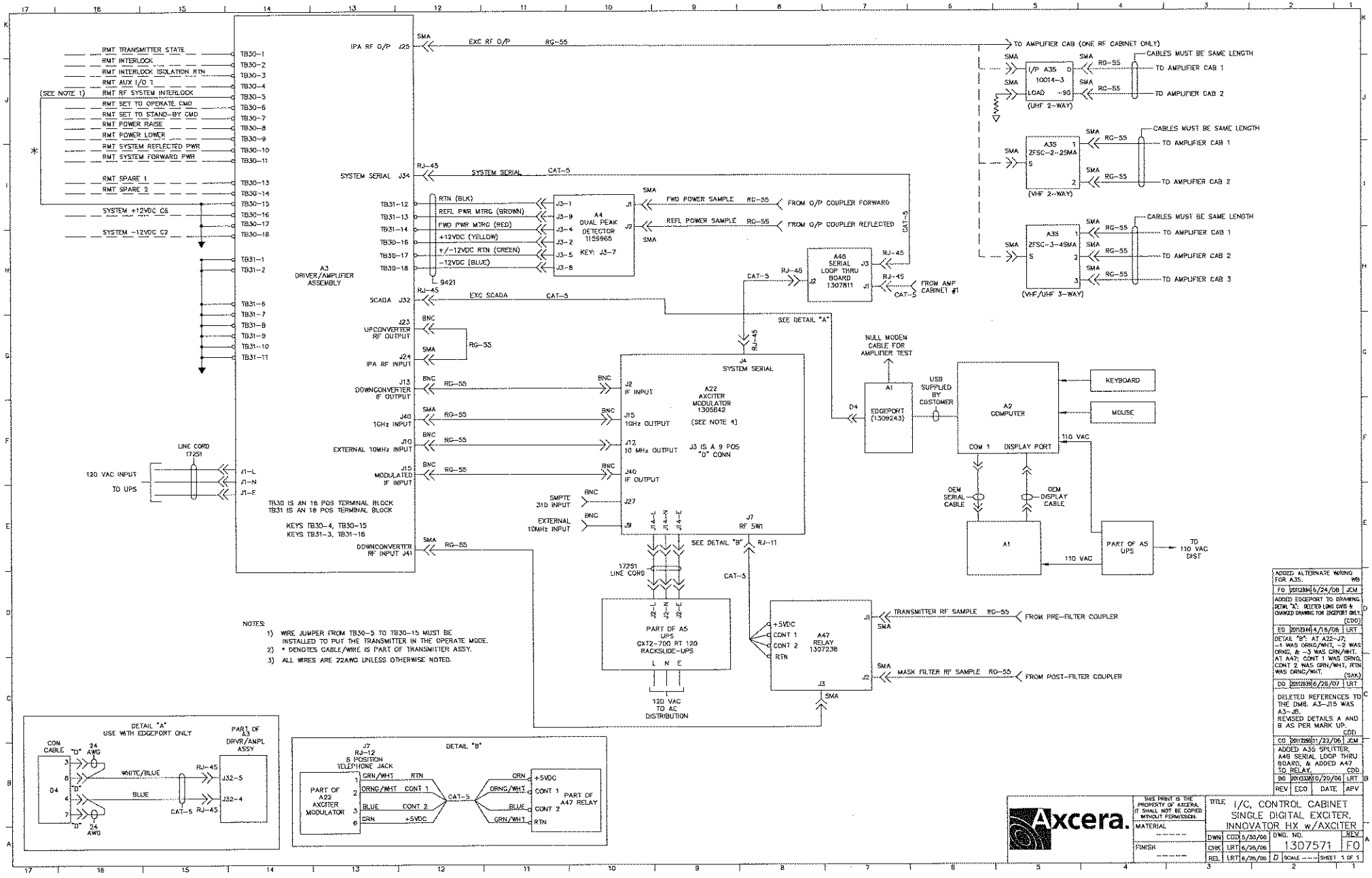

REV	ECO	DATE	APV
F0	20012894	6/24/08	JCM
E0	20012846	4/18/08	LRT
D0	20012639	6/28/07	LRT
C0	20012259	11/22/06	JCM
B0	20012330	10/20/06	LRT

ADDED ALTERNATE WIRING FOR A35. WB

ADDED EDGEPORT TO DRAWING. DETAIL "A": DELETED LONG CABLE & CHANGED DRAWING FOR EDGEPORT ONLY. (CDD)

DETAIL "B": AT A22-J7; -1 WAS ORNG/WHT, -2 WAS ORNG, & -3 WAS GRN/WHT. AT A47; CONT 1 WAS ORNG, CONT 2 WAS GRN/WHT, RTN WAS ORNG/WHT. (SAK)

DELETED REFERENCES TO THE DMB. A3-J15 WAS A3-J6. REVISED DETAILS A AND B AS PER MARK UP. CDD

ADDED A35 SPLITTER, A46 SERIAL LOOP THRU BOARD, & ADDED A47 TO RELAY. CDD

Axcera.

THIS PRINT IS THE PROPERTY OF AXCERA. IT SHALL NOT BE COPIED WITHOUT PERMISSION.

MATERIAL ———

FINISH ———

TITLE: I/C, CONTROL CABINET SINGLE DIGITAL EXCITER, INNOVATOR HX w/AXCITER

DWN	CDD	5/30/06
CHK	LRT	6/26/06
REL	LRT	6/26/06

DWG. NO. 13D7571 REV F0

SCALE ——— SHEET 1 OF 1

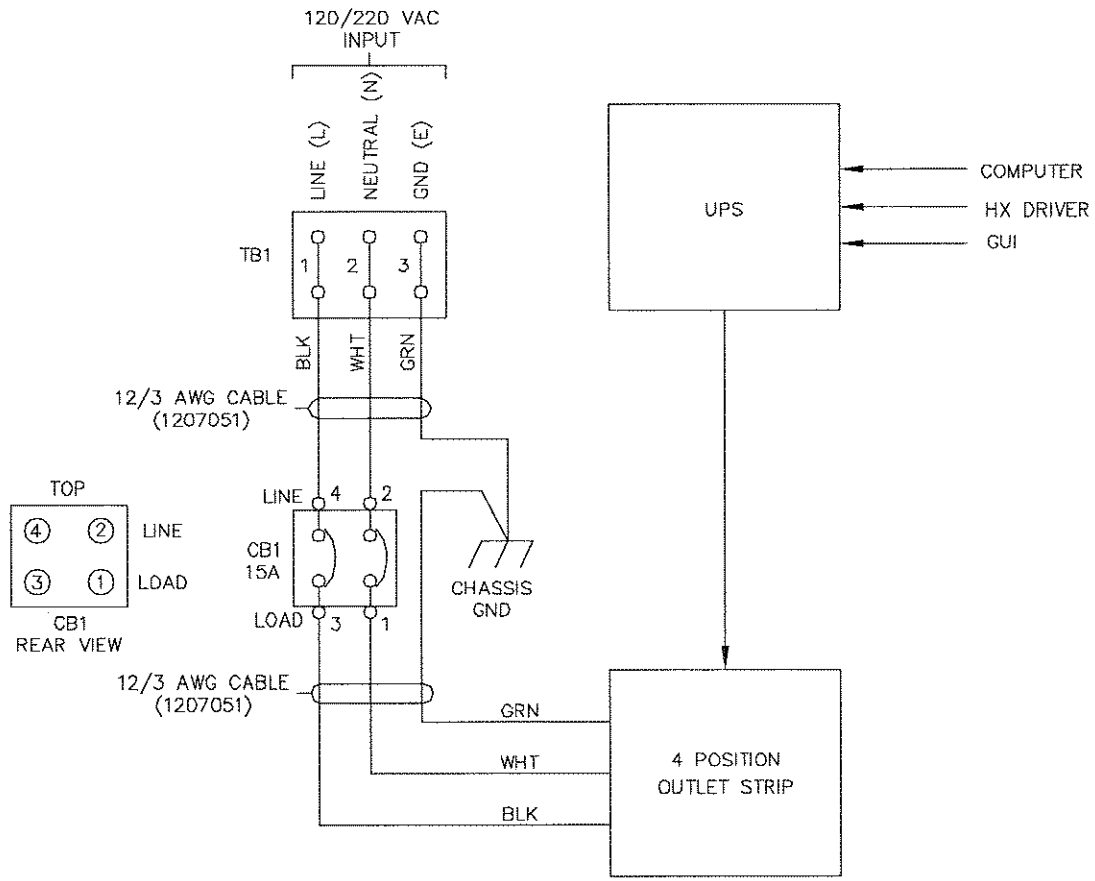

REV	ECO	DATE	APV

Axcera.

THIS PRINT IS THE PROPERTY OF AXCERA, IT SHALL NOT BE COPIED WITHOUT PERMISSION.

MATERIAL ------

FINISH ------

TITLE I/C, AC, CONTROL CABINET, UHF ANALOG, INNOVATOR HX

DWN	CDD	2/10/06	DWG. NO. 1307037	REV A0
CHK	LRT	2/10/06		
REL	LRT	2/10/06	B SCALE ---	SHEET 1 OF 1

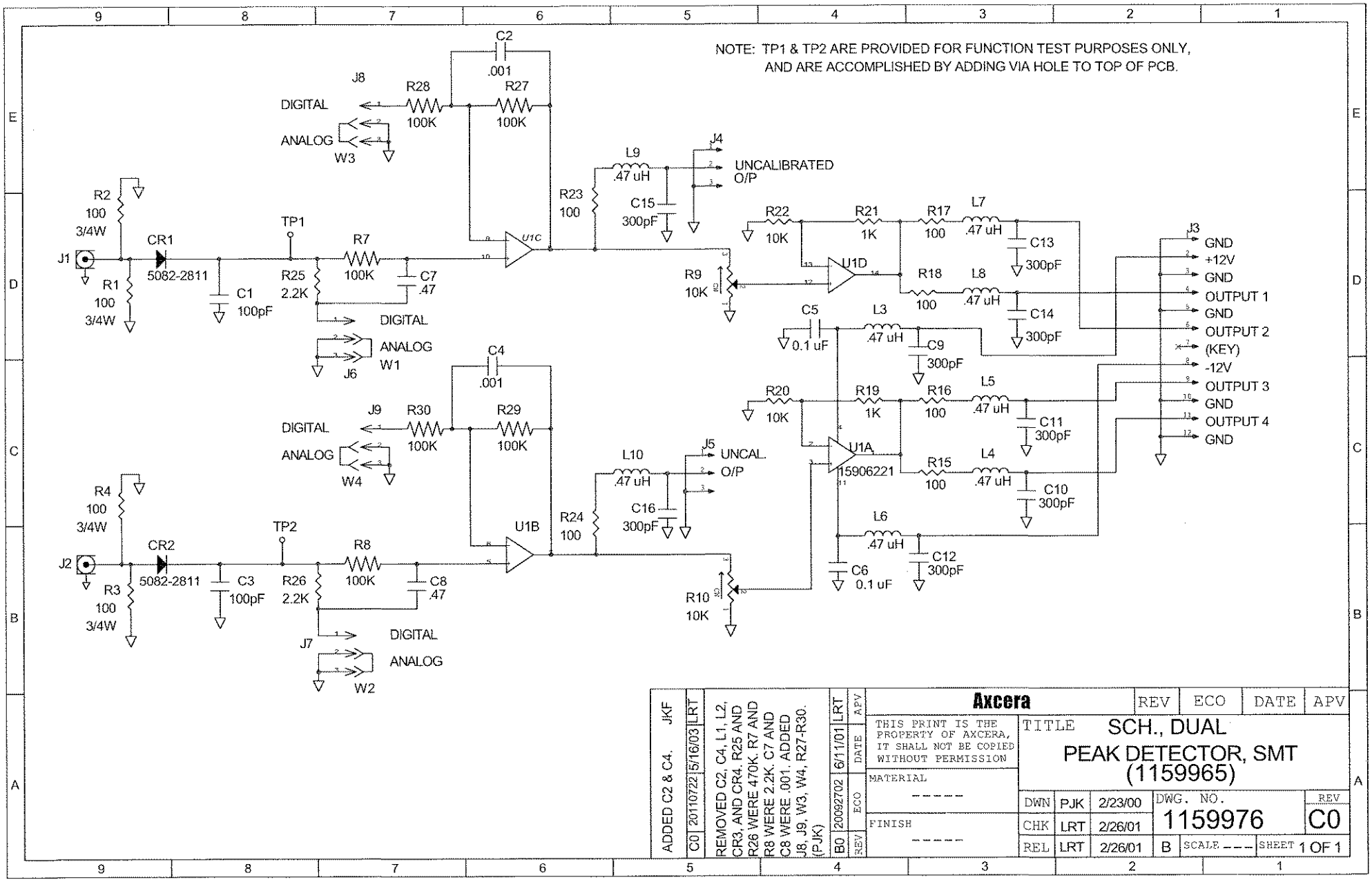

REV	ECO	DATE	APV	
C0	20110722	5/16/03	LRT	ADDED C2 & C4. JKF
B0	20092702	6/11/01	LRT	REMOVED C2, C4, L1, L2, CR3, AND CR4. R25 AND R26 WERE 470K. R7 AND R8 WERE 2.2K. C7 AND C8 WERE .001. ADDED J8, J9, W3, W4, R27-R30. (PJK)

Axcera

THIS PRINT IS THE PROPERTY OF AXCERA, IT SHALL NOT BE COPIED WITHOUT PERMISSION

MATERIAL ------

FINISH ------

TITLE SCH., DUAL PEAK DETECTOR, SMT (1159965)

DWN	PJK	2/23/00	DWG. NO. 1159976
CHK	LRT	2/26/01	REV C0
REL	LRT	2/26/01	B SCALE --- SHEET 1 OF 1

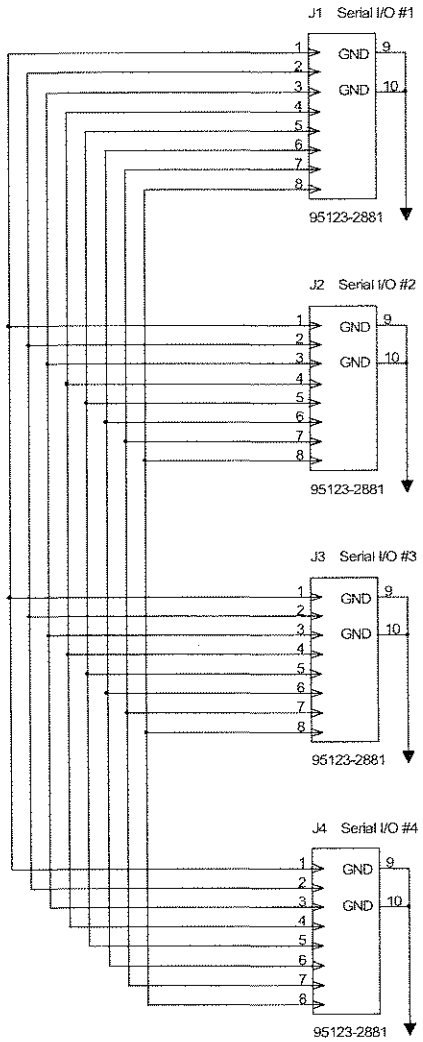

Layout Notes:

Add silkscreen note that all four ports are identical and interchangable.

Place all ports with the retainer clip towards the bottom.

Equally space the ports at 0.875 center to center.

Make board width the same as 1306988 (Reject Load monitoring board)

Make bottom of board to mount to a module.

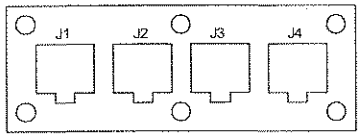

MATERIAL NUMBERS:
1307811 A/D,SERIAL LOOP THRU BRD
1307812 SCH,SERIAL LOOP THRU BRD
1307813 PCB,SERIAL LOOP THRU BRD

NOTE:

1) ALL RESISTORS ARE 1/8W UNLESS OTHERWISE NOTED.
2) ALL CAPACITORS ARE IN uF UNLESS OTHERWISE NOTED.
3) ALL INDUCTORS ARE IN uH UNLESS OTHERWISE NOTED.

Axcera			REV	ECO	DATE	APV
THIS PRINT IS THE PROPERTY OF AXCERA, IT SHALL NOT BE COPIED WITHOUT PERMISSION	TITLE SCH., SERIAL LOOP THRU BOARD (1307811)					
MATERIAL -----	DWN	JKF	7/19/06	DWG. NO. 1307812		REV A0
FINISH -----	CHK	REH	7/25/06			
	REL	REH	7/25/06	C	SCALE ---	SHEET 1 OF 1

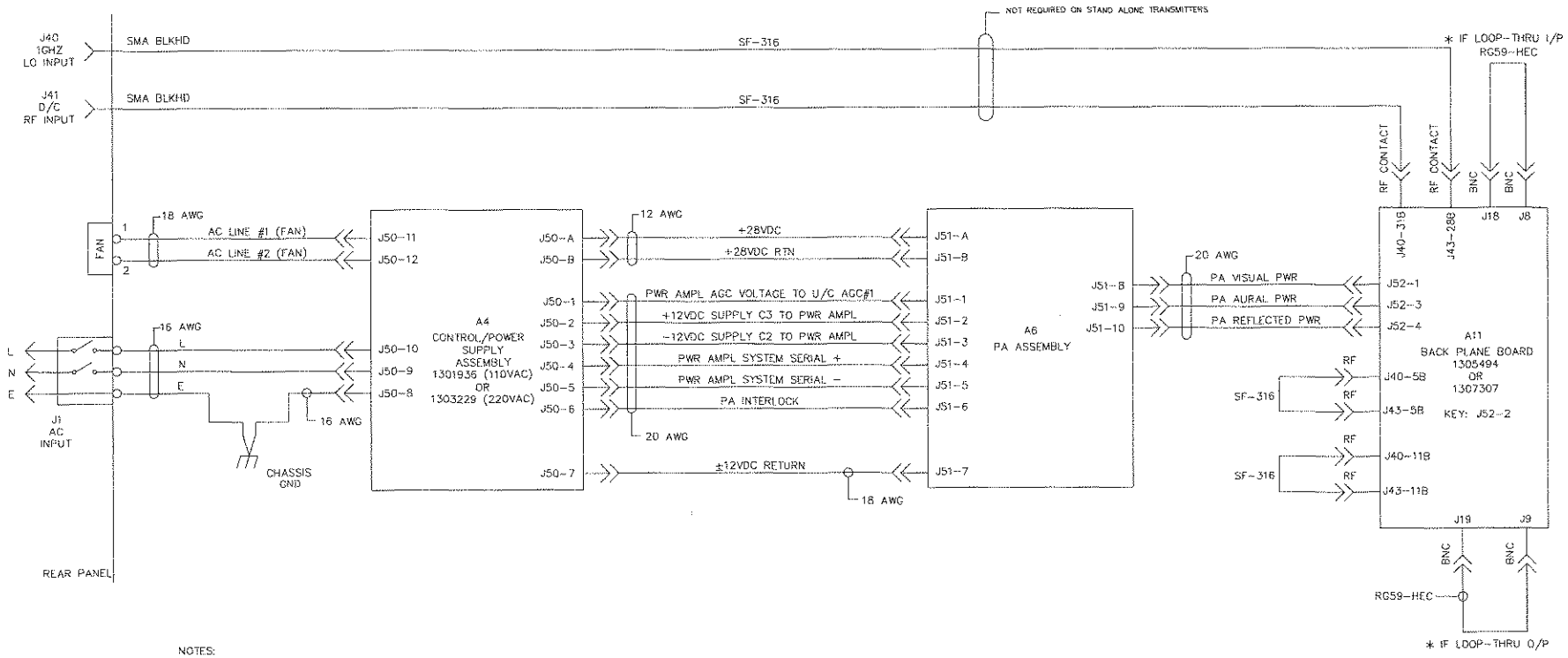

NOTES:

1) * INDICATES CABLE IS PART OF COAX ASSEMBLY.

REV	ECO	DATE	APV
D0	20012206	4/9/07	LRT
C0	20012246	5/01/06	JCM
B0	20012156	6/28/06	JCM

ADDED J1 DESIGNATOR AT REAR PANEL DWG ZONE 5-16. (SAK)

ADDED CONNECTIONS BETWEEN A6-J51 AND A11-J52. WS

ADDED COAX AT J40 AND J41. ADDED 1307307 AT A11. ADDED NOTE 2. WS

Axcera.

THIS PRINT IS THE PROPERTY OF AXCERA. IT SHALL NOT BE COPIED WITHOUT PERMISSION.

MATERIAL ------

FINISH ------

TITLE: I/C, CHASSIS ASSEMBLY, DRIVER INNOVATOR HX

DWN	RGE	01/28/05	DWG. NO. 1305554
CHK	DWB	5/10/05	REV D0
REL	DWB	5/10/05	D SCALE ---- SHEET 1 OF 1

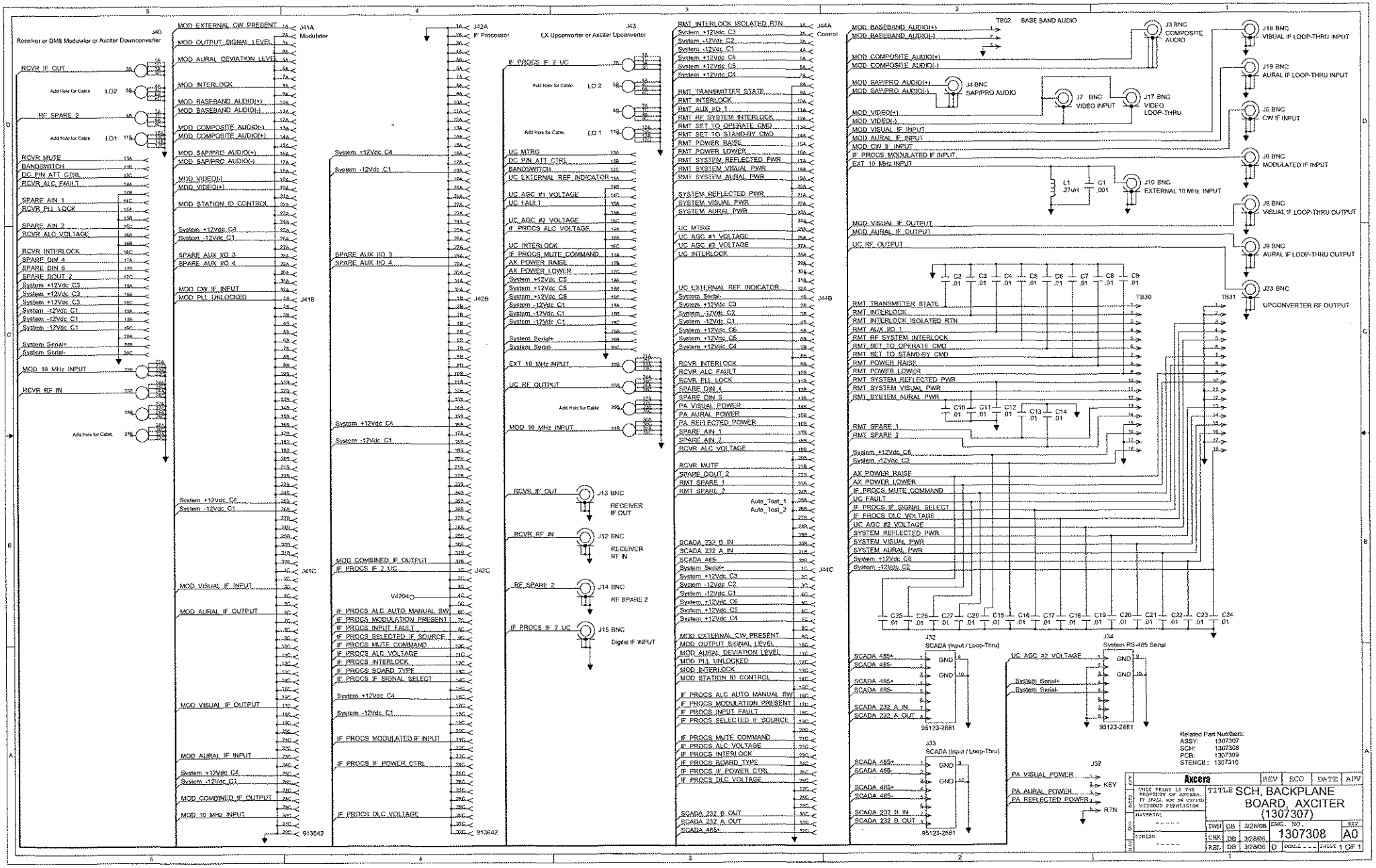
J40
Receiver or DMB Modulator or Exciter Downconverter
RCVR IF OUT
RF SPARE 2
RCVR MUTE
BANDSWITCH
DC PIN ATT CTRL
RCVR ALC FAULT
SPARE AIN 1
RCVR PLL LOCK
SPARE AIN 2
RCVR ALC VOLTAGE
RCVR INTERLOCK
SPARE DIN 4
SPARE DIN 5
SPARE DOUT 2
System +12Vdc C3
System -12Vdc C1
System Serial+
System Serial-
MOD 10 MHz INPUT
RCVR RF IN
Add Hole for Cable
LO2
LO1
J41A
Modulator
MOD EXTERNAL CW PRESENT
MOD OUTPUT SIGNAL LEVEL
MOD AURAL DEVIATION LEVEL
MOD INTERLOCK
MOD BASEBAND AUDIO(+)
MOD BASEBAND AUDIO(-)
MOD COMPOSITE AUDIO(-)
MOD COMPOSITE AUDIO(+)
MOD SAP/PRO AUDIO(+)
MOD SAP/PRO AUDIO(-)
MOD VIDEO(-)
MOD VIDEO(+)
MOD STATION ID CONTROL
System +12Vdc C4
System -12Vdc C1
SPARE AUX I/O 3
SPARE AUX I/O 4
MOD CW IF INPUT
MOD PLL UNLOCKED
J41B
J41C
MOD VISUAL IF INPUT
MOD AURAL IF OUTPUT
MOD VISUAL IF OUTPUT
MOD AURAL IF INPUT
MOD COMBINED IF OUTPUT
MOD 10 MHz INPUT
913642
J42A
IF Processor
System +12Vdc C4
System -12Vdc C1
SPARE AUX I/O 3
SPARE AUX I/O 4
J42B
System +12Vdc C4
System -12Vdc C1
MOD COMBINED IF OUTPUT
IF PROCS IF 2 UC
J42C
V4204
IF PROCS ALC AUTO MANUAL SW
IF PROCS MODULATION PRESENT
IF PROCS INPUT FAULT
IF PROCS SELECTED IF SOURCE
IF PROCS MUTE COMMAND
IF PROCS ALC VOLTAGE
IF PROCS INTERLOCK
IF PROCS BOARD TYPE
IF PROCS IF SIGNAL SELECT
System +12Vdc C4
System -12Vdc C1
IF PROCS MODULATED IF INPUT
IF PROCS IF POWER CTRL
IF PROCS DLC VOLTAGE
913642
J43
LX Upconverter or Exciter Upconverter
IF PROCS IF 2 UC
LO 2
LO 1
UC MTRG
DC PIN ATT CTRL
BANDSWITCH
UC EXTERNAL REF INDICATOR
UC AGC #1 VOLTAGE
UC FAULT
UC AGC #2 VOLTAGE
IF PROCS ALC VOLTAGE
UC INTERLOCK
IF PROCS MUTE COMMAND
AX POWER RAISE
AX POWER LOWER
System +12Vdc C5
System -12Vdc C5
System -12Vdc C1
System Serial+
System Serial-
EXT 10 MHz INPUT
UC RF OUTPUT
MOD 10 MHz INPUT
RCVR IF OUT
J13 BNC
RECEIVER IF OUT
RCVR RF IN
J12 BNC
RECEIVER RF IN
RF SPARE 2
J14 BNC
RF SPARE 2
IF PROCS IF 2 UC
J15 BNC
Digital IF INPUT
RMT INTERLOCK ISOLATED RTN
System +12Vdc C3
System -12Vdc C2
System -12Vdc C1
System +12Vdc C6
System +12Vdc C5
System +12Vdc C4
RMT TRANSMITTER STATE
RMT INTERLOCK
RMT AUX I/O 1
RMT RF SYSTEM INTERLOCK
RMT SET TO OPERATE CMD
RMT SET TO STAND-BY CMD
RMT POWER RAISE
RMT POWER LOWER
RMT SYSTEM REFLECTED PWR
RMT SYSTEM VISUAL PWR
RMT SYSTEM AURAL PWR
SYSTEM REFLECTED PWR
SYSTEM VISUAL PWR
SYSTEM AURAL PWR
UC MTRG
UC AGC #1 VOLTAGE
UC AGC #2 VOLTAGE
UC INTERLOCK
UC EXTERNAL REF INDICATOR
System Serial-
System +12Vdc C3
System -12Vdc C2
System -12Vdc C1
System +12Vdc C6
System +12Vdc C5
System +12Vdc C4
RCVR INTERLOCK
RCVR ALC FAULT
RCVR PLL LOCK
SPARE DIN 4
SPARE DIN 5
PA VISUAL POWER
PA AURAL POWER
PA REFLECTED POWER
SPARE AIN 1
SPARE AIN 2
RCVR ALC VOLTAGE
RCVR MUTE
SPARE DOUT 2
RMT SPARE 1
RMT SPARE 2
Auto_Test_1
Auto_Test_2
SCADA 232 B IN
SCADA 232 A IN
SCADA 485-
System Serial+
System +12Vdc C3
System -12Vdc C2
System -12Vdc C1
System +12Vdc C6
System +12Vdc C5
System +12Vdc C4
MOD EXTERNAL CW PRESENT
MOD OUTPUT SIGNAL LEVEL
MOD AURAL DEVIATION LEVEL
MOD PLL UNLOCKED
MOD INTERLOCK
MOD STATION ID CONTROL
IF PROCS ALC AUTO MANUAL SW
IF PROCS MODULATION PRESENT
IF PROCS INPUT FAULT
IF PROCS SELECTED IF SOURCE
IF PROCS MUTE COMMAND
IF PROCS ALC VOLTAGE
IF PROCS INTERLOCK
IF PROCS BOARD TYPE
IF PROCS IF POWER CTRL
IF PROCS DLC VOLTAGE
SCADA 232 B OUT
SCADA 232 A OUT
SCADA 485+
J44A
Control
J44B
J44C
TB02 BASE BAND AUDIO
MOD BASEBAND AUDIO(+)
MOD BASEBAND AUDIO(-)
MOD COMPOSITE AUDIO(+)
MOD COMPOSITE AUDIO(-)
J3 BNC COMPOSITE AUDIO
MOD SAP/PRO AUDIO(+)
MOD SAP/PRO AUDIO(-)
J4 BNC SAP/PRO AUDIO
J7 BNC VIDEO INPUT
J17 BNC VIDEO LOOP-THRU
MOD VIDEO(+)
MOD VIDEO(-)
MOD VISUAL IF INPUT
MOD AURAL IF INPUT
MOD CW IF INPUT
IF PROCS MODULATED IF INPUT
EXT 10 MHz INPUT
L1 .27uH
C1 .001
J10 BNC EXTERNAL 10 MHz INPUT
MOD VISUAL IF OUTPUT
MOD AURAL IF OUTPUT
UC RF OUTPUT
J18 BNC VISUAL IF LOOP-THRU INPUT
J19 BNC AURAL IF LOOP-THRU INPUT
J5 BNC CW IF INPUT
J6 BNC MODULATED IF INPUT
J8 BNC VISUAL IF LOOP-THRU OUTPUT
J9 BNC AURAL IF LOOP-THRU OUTPUT
J23 BNC UPCONVERTER RF OUTPUT
C2 C3 C4 C5 C6 C7 C8 C9 .01
TB30
TB31
RMT TRANSMITTER STATE
RMT INTERLOCK
RMT INTERLOCK ISOLATED RTN
RMT AUX I/O 1
RMT RF SYSTEM INTERLOCK
RMT SET TO OPERATE CMD
RMT SET TO STAND-BY CMD
RMT POWER RAISE
RMT POWER LOWER
RMT SYSTEM REFLECTED PWR
RMT SYSTEM VISUAL PWR
RMT SYSTEM AURAL PWR
C10 C11 C12 C13 C14 .01
RMT SPARE 1
RMT SPARE 2
System +12Vdc C6
System -12Vdc C2
AX POWER RAISE
AX POWER LOWER
IF PROCS MUTE COMMAND
UC FAULT
IF PROCS IF SIGNAL SELECT
IF PROCS DLC VOLTAGE
UC AGC #2 VOLTAGE
SYSTEM REFLECTED PWR
SYSTEM VISUAL PWR
SYSTEM AURAL PWR
System +12Vdc C6
System -12Vdc C2
C25 C26 C27 C28 C15 C16 C17 C18 C19 C20 C21 C22 C23 C24 .01
J32
SCADA (Input / Loop-Thru)
SCADA 485+
SCADA 485-
SCADA 232 A IN
SCADA 232 A OUT
GND
95123-2681
J34
System RS-485 Serial
UC AGC #2 VOLTAGE
System Serial+
System Serial-
J33
SCADA (Input / Loop-Thru)
SCADA 232 B IN
SCADA 232 B OUT
J52
PA VISUAL POWER
KEY
PA AURAL POWER
PA REFLECTED POWER
RTN
Related Part Numbers:
ASSY: 1307307
SCH: 1307308
PCB: 1307309
STENCIL: 1307310
Axcera
REV ECO DATE APV
THIS PRINT IS THE PROPERTY OF AXCERA, IT SHALL NOT BE COPIED WITHOUT PERMISSION
TITLE SCH, BACKPLANE BOARD, AXCITER (1307307)
DRN DB 3/28/06
CHK DB 3/28/06
APP DB 3/28/06
DWG. NO. 1307308
REV A0
SCALE - - -
SHEET 1 OF 1

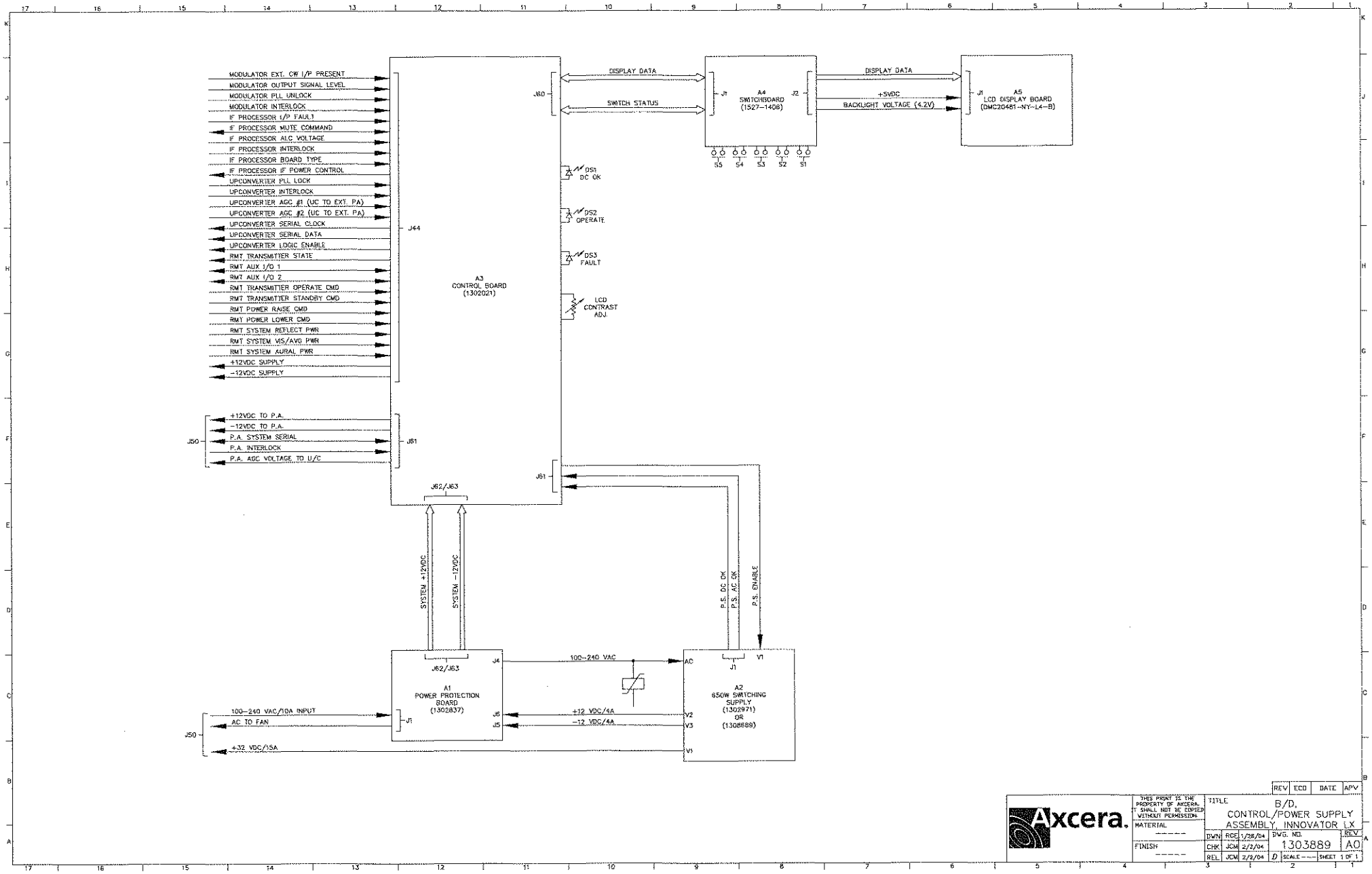

REV	ECO	DATE	APV

Axcera.

THIS PRINT IS THE PROPERTY OF AXCERA. IT SHALL NOT BE COPIED WITHOUT PERMISSION.

MATERIAL ------

FINISH ------

TITLE B/D, CONTROL/POWER SUPPLY ASSEMBLY, INNOVATOR LX

DWN	RGE	1/28/04	
CHK	JCM	2/2/04	
REL	JCM	2/2/04	D

DWG. NO. 1303889 REV A0

SCALE ---- SHEET 1 OF 1

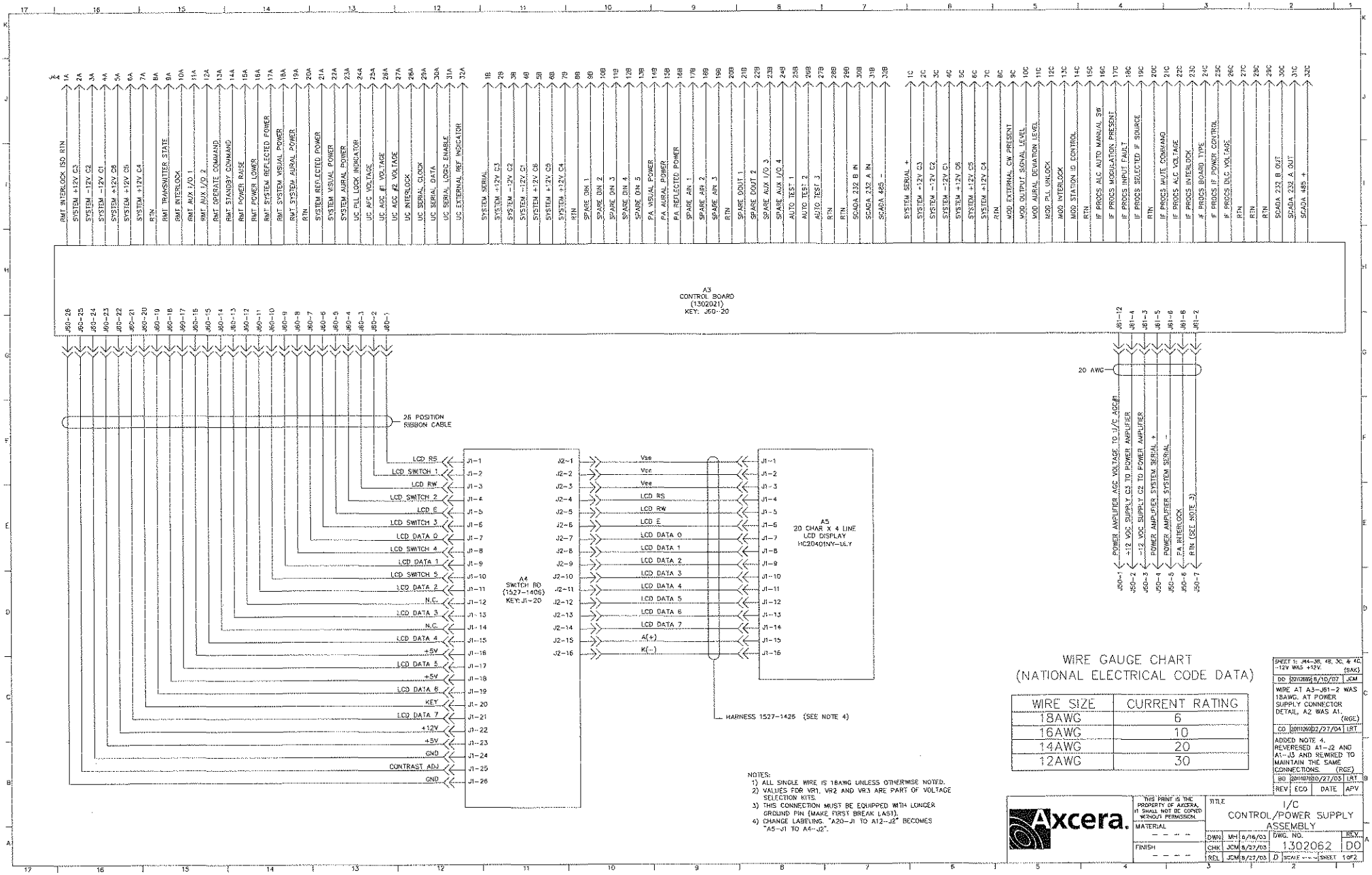

WIRE GAUGE CHART
(NATIONAL ELECTRICAL CODE DATA)

WIRE SIZE	CURRENT RATING
18AWG	6
16AWG	10
14AWG	20
12AWG	30

NOTES:
1) ALL SINGLE WIRE IS 18AWG UNLESS OTHERWISE NOTED.
2) VALUES FOR VR1, VR2 AND VR3 ARE PART OF VOLTAGE SELECTION KITS.
3) THIS CONNECTION MUST BE EQUIPPED WITH LONGER GROUND PIN (MAKE FIRST BREAK LAST).
4) CHANGE LABELING "A20-J1 TO A12-J2" BECOMES "A5-J1 TO A4-J2".

REV	ECO	DATE	APV
SHEET 1: J4A-3B, 4B, 3C, & 4C -12V WAS +12V.			(SAK)
DD	20112869	8/10/07	JCM
WIRE AT A3-J61-2 WAS 18AWG. AT POWER SUPPLY CONNECTOR DETAIL, A2 WAS A1.			(RGE)
CO	20111260	02/27/04	LRT
ADDED NOTE 4. REVERSED A1-J2 AND A1-J3 AND REWIRED TO MAINTAIN THE SAME CONNECTIONS.			(RGE)
B0	20110270	10/27/03	LRT

Axcera.

THIS PRINT IS THE PROPERTY OF AXCERA, IT SHALL NOT BE COPIED WITHOUT PERMISSION.

MATERIAL — — — —

FINISH — — — —

TITLE
I/C
CONTROL/POWER SUPPLY
ASSEMBLY

DWN	MH	6/16/03	
CHK	JCM	8/27/03	
REL	JCM	8/27/03	

DWG. NO. 1302062 REV. D0

D SCALE - - - SHEET 1 OF 2

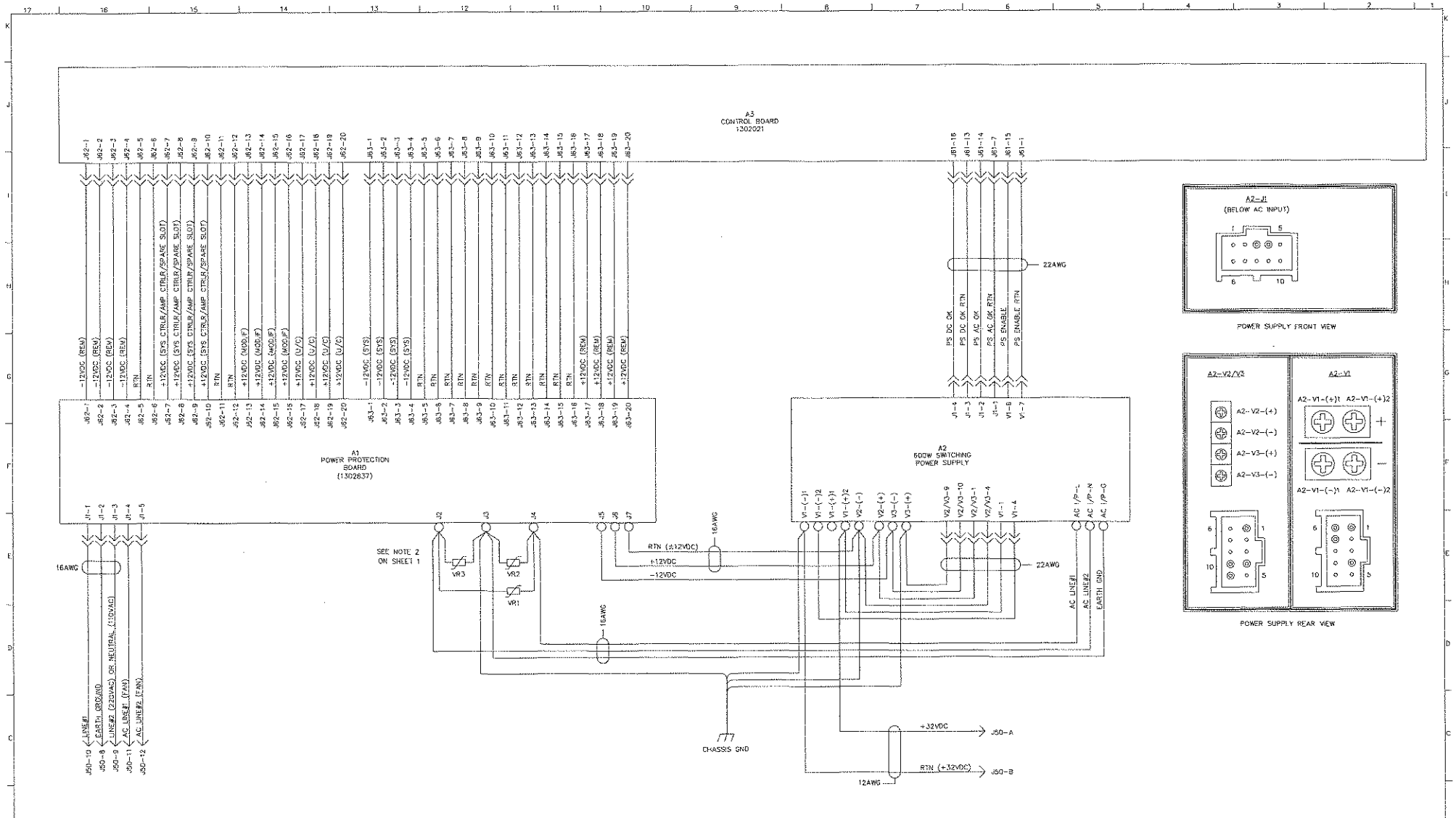

REV	ECO	DATE	APV

Axcera.

THIS PRINT IS THE PROPERTY OF AXCERA. IT SHALL NOT BE COPIED WITHOUT PERMISSION.

MATERIAL

FINISH

TITLE I/C CONTROL/POWER SUPPLY ASSEMBLY

DWN	MH	8/18/03	
CHK	JCM	8/27/03	
REL	JCM	8/27/03	

DWG. NO. 1302062 REV D0

D SCALE ---- SHEET 2OF2

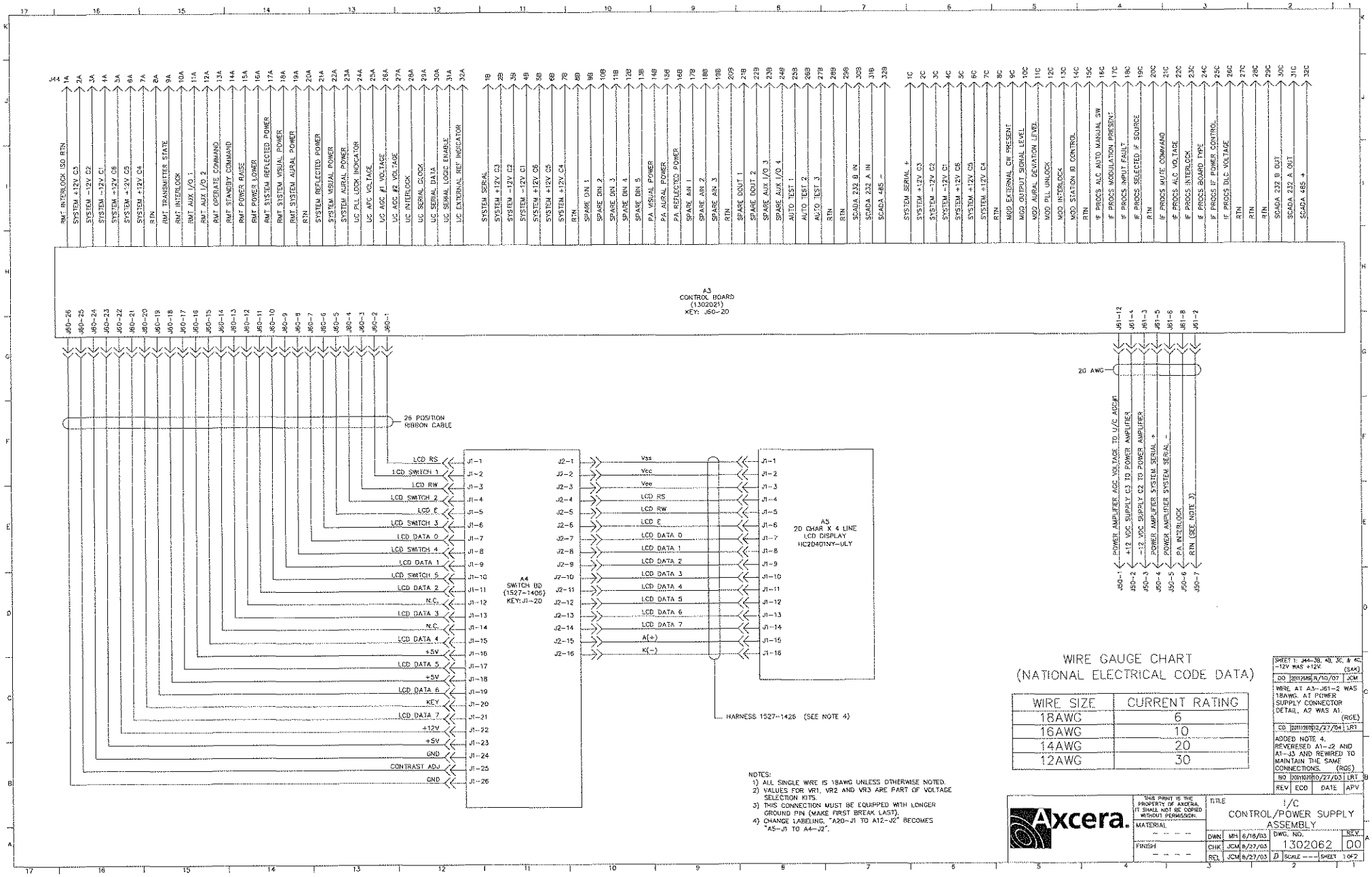

NOTES:
1) ALL SINGLE WIRE IS 18AWG UNLESS OTHERWISE NOTED.
2) VALUES FOR VR1, VR2 AND VR3 ARE PART OF VOLTAGE SELECTION KITS.
3) THIS CONNECTION MUST BE EQUIPPED WITH LONGER GROUND PIN (MAKE FIRST BREAK LAST).
4) CHANGE LABELING, "A20-J1 TO A12-J2" BECOMES "A5-J1 TO A4-J2".

WIRE GAUGE CHART
(NATIONAL ELECTRICAL CODE DATA)

WIRE SIZE	CURRENT RATING
18AWG	6
16AWG	10
14AWG	20
12AWG	30

SHEET 1: J44-3B, 4B, 3C, & 4C, -12V WAS +12V. (SAK)			
DO	20011686	5/10/07	JCM
WIRE AT A3-J61-2 WAS 18AWG. A7 POWER SUPPLY CONNECTOR DETAIL, A2 WAS A1 (RGE)			
CD	20011260	02/27/04	LR1
ADDED NOTE 4. REVERSED A1-J2 AND A1-J3 AND REWIRED TO MAINTAIN THE SAME CONNECTIONS. (RGE)			
BO	20011020	10/27/03	LRT
REV	ECO	DATE	APV

Axcera.

THIS PRINT IS THE PROPERTY OF AXCERA. IT SHALL NOT BE COPIED WITHOUT PERMISSION.

MATERIAL — — — —
FINISH — — — —

TITLE: I/C CONTROL/POWER SUPPLY ASSEMBLY

DWN	MPS	6/16/03	DWG. NO. 1302062
CHK	JCM	8/27/03	REV 00
RQ	JCM	8/27/03	SCALE — — — SHEET 1 OF 2

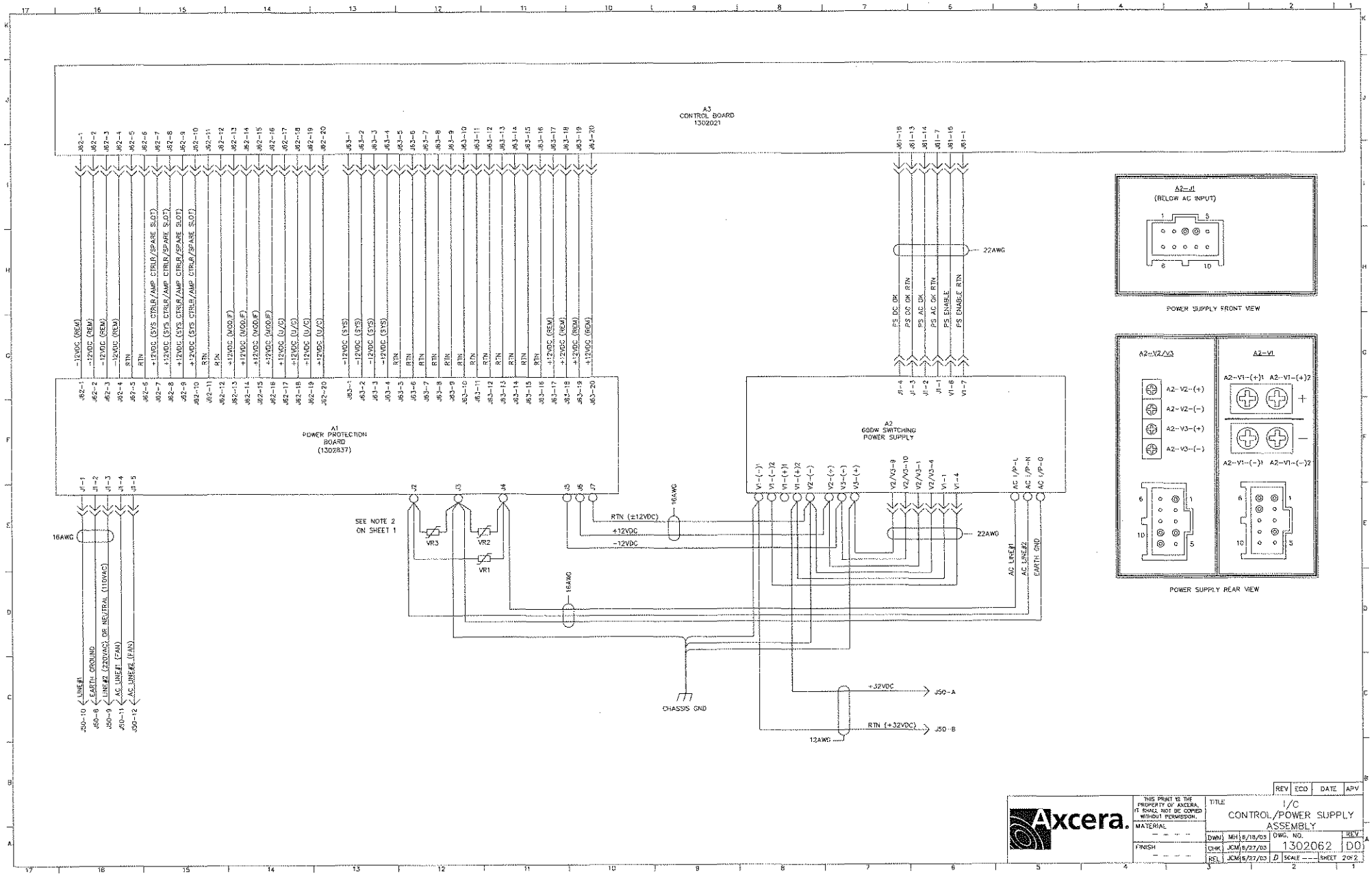

REV	ECO	DATE	APV

Axcera.

THIS PRINT IS THE PROPERTY OF AXCERA, IT SHALL NOT BE COPIED WITHOUT PERMISSION.

MATERIAL — — — — —

FINISH — — — — —

TITLE: I/C CONTROL/POWER SUPPLY ASSEMBLY

DWN	MH	6/18/03	
CHK	JCM	6/27/03	
REL	JCM	6/27/03	D

DWG. NO. 1302062 REV D0

SCALE — — — SHEET 2 OF 2

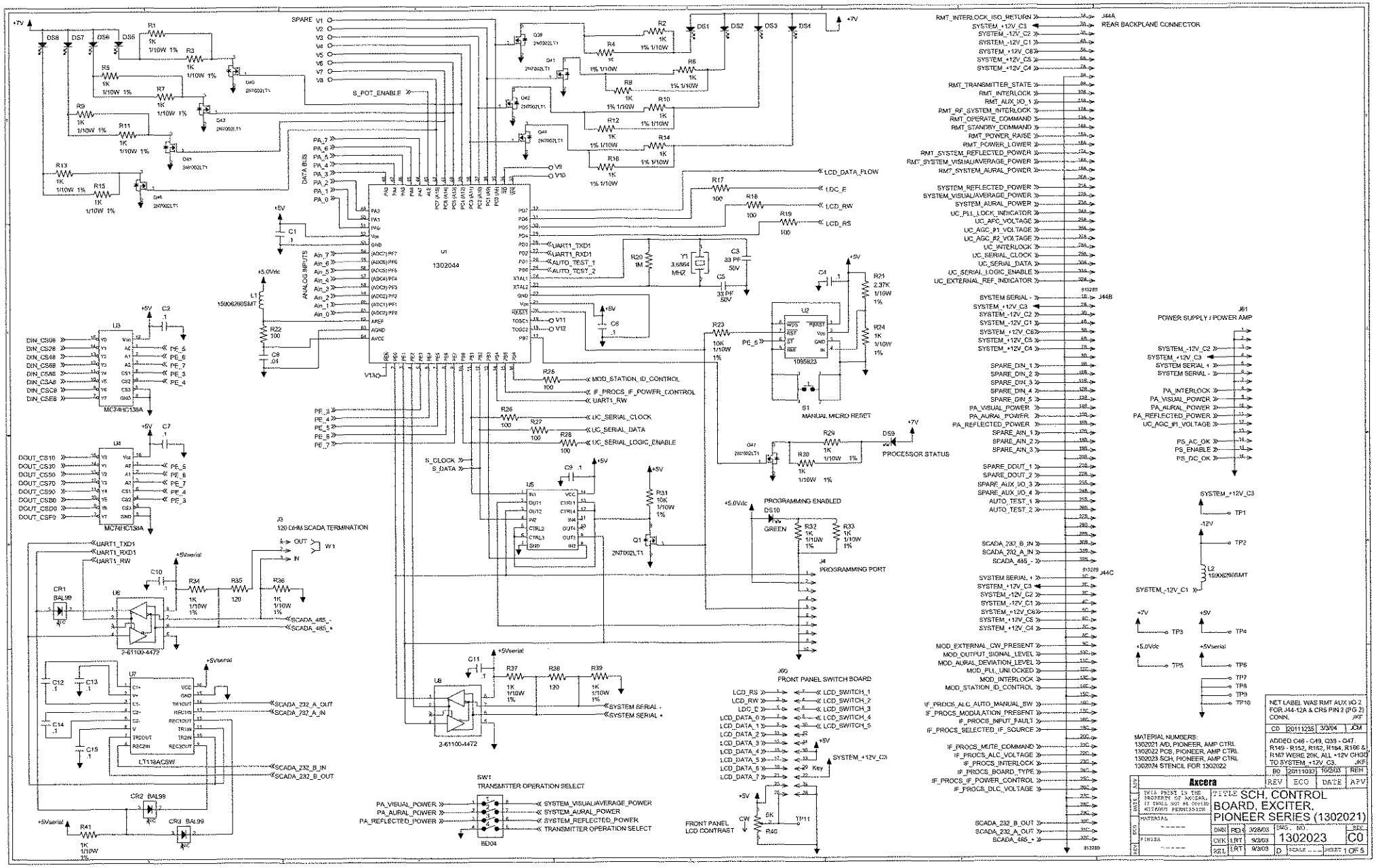
J44A
REAR BACKPLANE CONNECTOR
J44B
J44C
J61
POWER SUPPLY / POWER AMP
U1
1302044
U2
1055823
S1
MANUAL MICRO RESET
PROCESSOR STATUS
PROGRAMMING ENABLED
J4
PROGRAMMING PORT
J3
120 OHM SCADA TERMINATION
J90
FRONT PANEL SWITCH BOARD
SW1
TRANSMITTER OPERATION SELECT
FRONT PANEL LCD CONTRAST
MC74HC138A
2-61100-4472
LT118ACSW
NET LABEL WAS RMT AUX IO 2 FOR J44-12A & CRS PIN 2 (PG 2) CONN.
ADDED C46 - C49, C39 - C47. R149 - R152, R162, R164, R166 & R167 WERE 20K. ALL +12V CHGD TO SYSTEM_+12V_C3.
MATERIAL NUMBERS:
1302021 AD, PIONEER, AMP CTRL
1302022 PCB, PIONEER, AMP CTRL
1302023 SCH, PIONEER, AMP CTRL
1302024 STENCIL FOR 1302022
Axcera
SCH. CONTROL BOARD, EXCITER, PIONEER SERIES (1302021)
1302023
C0
SHEET 1 OF 5

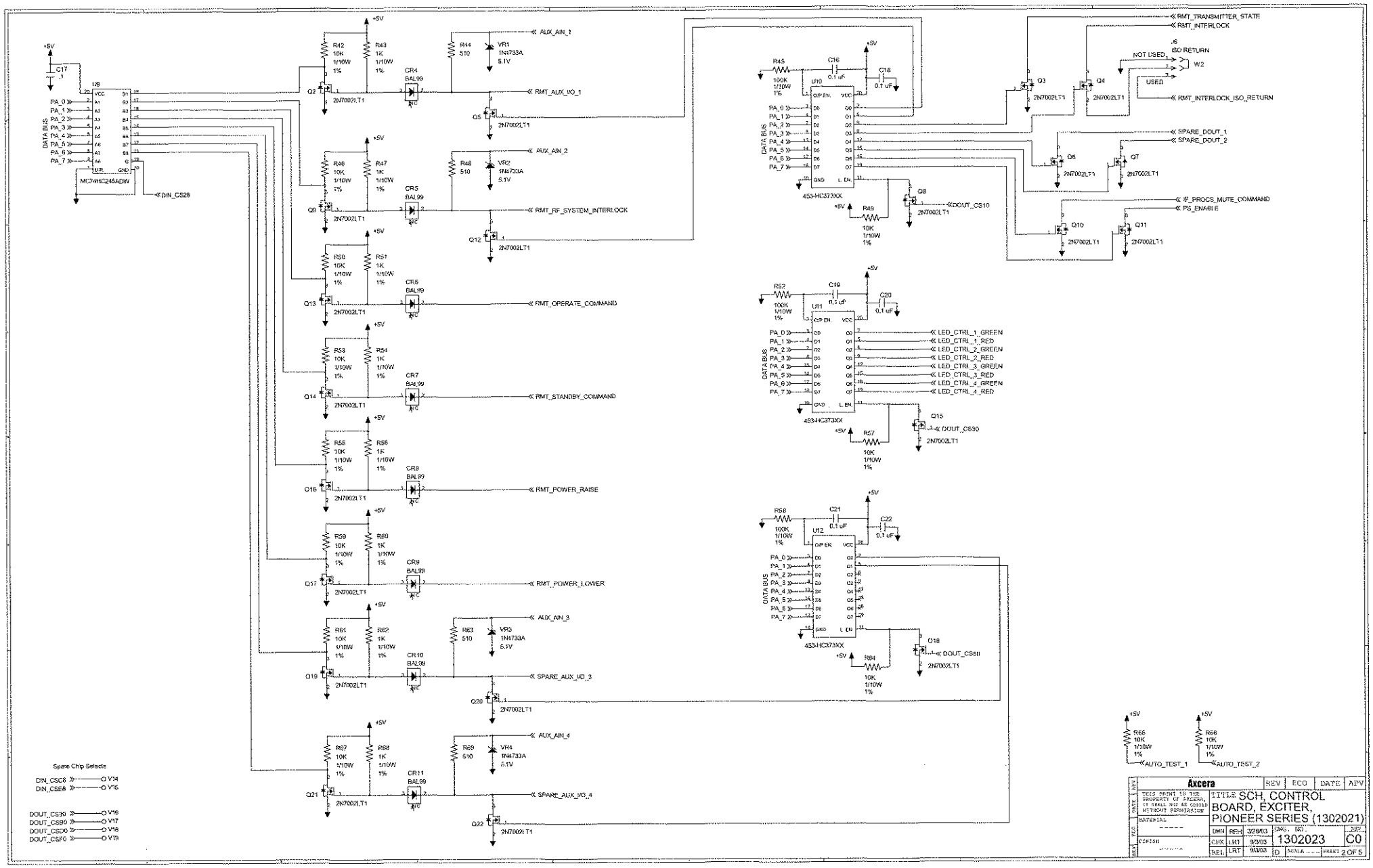
U9
MC74HC245ADW
DIN_CS28
DATA BUS
PA_0
PA_1
PA_2
PA_3
PA_4
PA_5
PA_6
PA_7
C17
+5V
R42 10K 1/10W 1%
R43 1K 1/10W 1%
R44 510
VR1 1N4733A 5.1V
AUX_AIN_1
CR4 BAL99
Q2 2N7002LT1
Q5 2N7002LT1
RMT_AUX_IO_1
R46 10K 1/10W 1%
R47 1K 1/10W 1%
R48 510
VR2 1N4733A 5.1V
AUX_AIN_2
CR5 BAL99
Q9 2N7002LT1
Q12 2N7002LT1
RMT_RF_SYSTEM_INTERLOCK
R50 10K 1/10W 1%
R51 1K 1/10W 1%
CR6 BAL99
Q13 2N7002LT1
RMT_OPERATE_COMMAND
R53 10K 1/10W 1%
R54 1K 1/10W 1%
CR7 BAL99
Q14 2N7002LT1
RMT_STANDBY_COMMAND
R55 10K 1/10W 1%
R56 1K 1/10W 1%
CR8 BAL99
Q16 2N7002LT1
RMT_POWER_RAISE
R59 10K 1/10W 1%
R60 1K 1/10W 1%
CR9 BAL99
Q17 2N7002LT1
RMT_POWER_LOWER
R61 10K 1/10W 1%
R62 1K 1/10W 1%
R63 510
VR3 1N4733A 5.1V
AUX_AIN_3
CR10 BAL99
Q19 2N7002LT1
Q20 2N7002LT1
SPARE_AUX_IO_3
R67 10K 1/10W 1%
R68 1K 1/10W 1%
R69 510
VR4 1N4733A 5.1V
AUX_AIN_4
CR11 BAL99
Q21 2N7002LT1
Q22 2N7002LT1
SPARE_AUX_IO_4
Spare Chip Selects
DIN_CS28 V14
DIN_CS18 V15
DOUT_CS30 V16
DOUT_CS20 V17
DOUT_CS10 V18
DOUT_CS00 V19
R45 100K 1/10W 1%
C16 0.1 uF
C18 0.1 uF
U10
453-HC373XX
R49 10K 1/10W 1%
Q8 2N7002LT1
DOUT_CS10
R52 100K 1/10W 1%
C19 0.1 uF
C20 0.1 uF
U11
453-HC373XX
LED_CTRL_1_GREEN
LED_CTRL_1_RED
LED_CTRL_2_GREEN
LED_CTRL_2_RED
LED_CTRL_3_GREEN
LED_CTRL_3_RED
LED_CTRL_4_GREEN
LED_CTRL_4_RED
R57 10K 1/10W 1%
Q15 2N7002LT1
DOUT_CS30
R58 100K 1/10W 1%
C21 0.1 uF
C22 0.1 uF
U12
453-HC373XX
R64 10K 1/10W 1%
Q18 2N7002LT1
DOUT_CS00
RMT_TRANSMITTER_STATE
RMT_INTERLOCK
J6
NOT USED
ISO RETURN
W2
USED
RMT_INTERLOCK_ISO_RETURN
Q3 2N7002LT1
Q4 2N7002LT1
SPARE_DOUT_1
SPARE_DOUT_2
Q6 2N7002LT1
Q7 2N7002LT1
IP_PROCS_MUTE_COMMAND
PS_ENABLE
Q10 2N7002LT1
Q11 2N7002LT1
R65 10K 1/10W 1%
AUTO_TEST_1
R66 10K 1/10W 1%
AUTO_TEST_2
Axcera
REV ECO DATE APV
THIS PRINT IS THE PROPERTY OF AXCERA, IT SHALL NOT BE COPIED WITHOUT PERMISSION
TITLE SCH, CONTROL BOARD, EXCITER, PIONEER SERIES (1302021)
MATERIAL
FINISH
DWN REH 3/28/03
CHK LRT 9/3/03
REL LRT 9/3/03
DWG. NO. 1302023
REV C0
SCALE
SHEET 2 OF 5

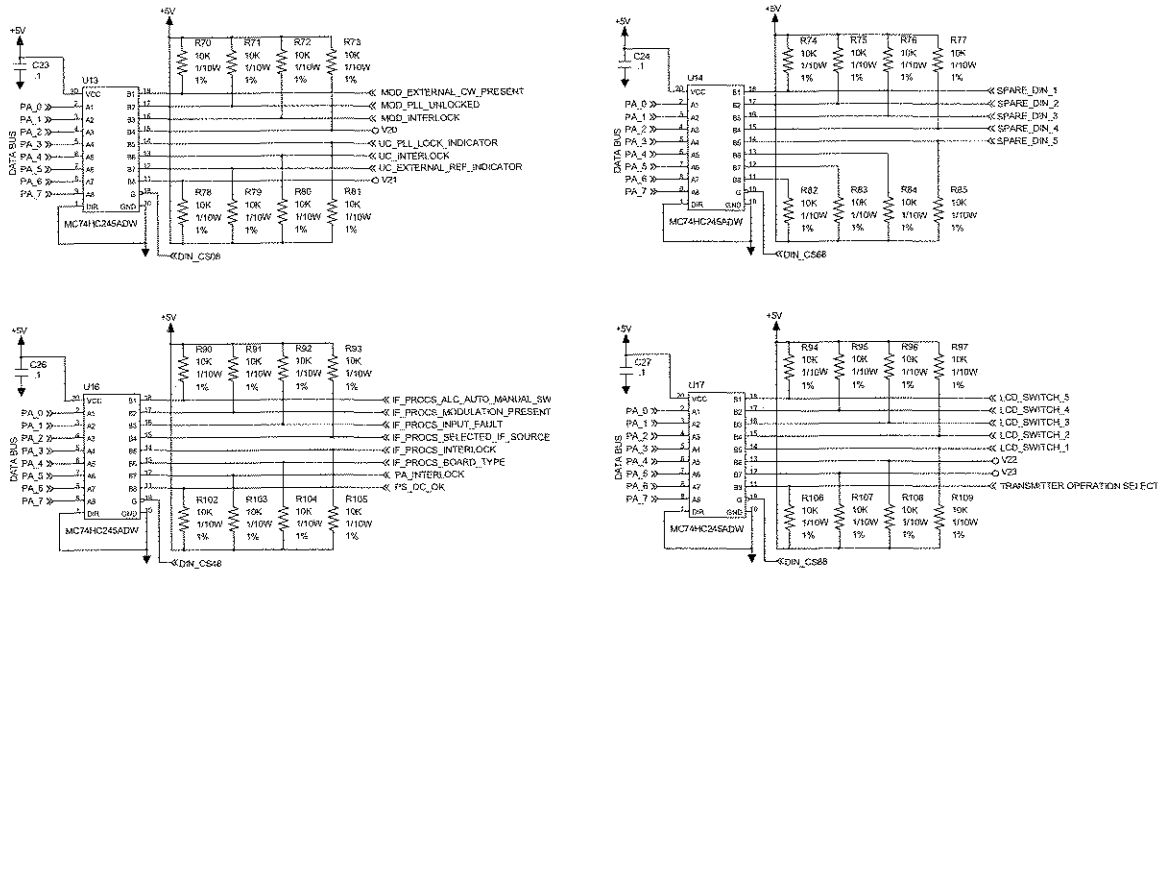

Axcera		REV	ECO	DATE	APV
THIS PRINT IS THE PROPERTY OF AXCERA, IT SHALL NOT BE COPIED WITHOUT PERMISSION	TITLE SCH, CONTROL BOARD, EXCITER, PIONEER SERIES (1302021)				
MATERIAL ------	DRN REH 3/28/03	DWG. NO. 1302023		REV C0	
FINISH ------	CHK LRT 9/3/03				
	REL LRT 9/3/03	D	SCALE ---	SHEET 3 OF 5	

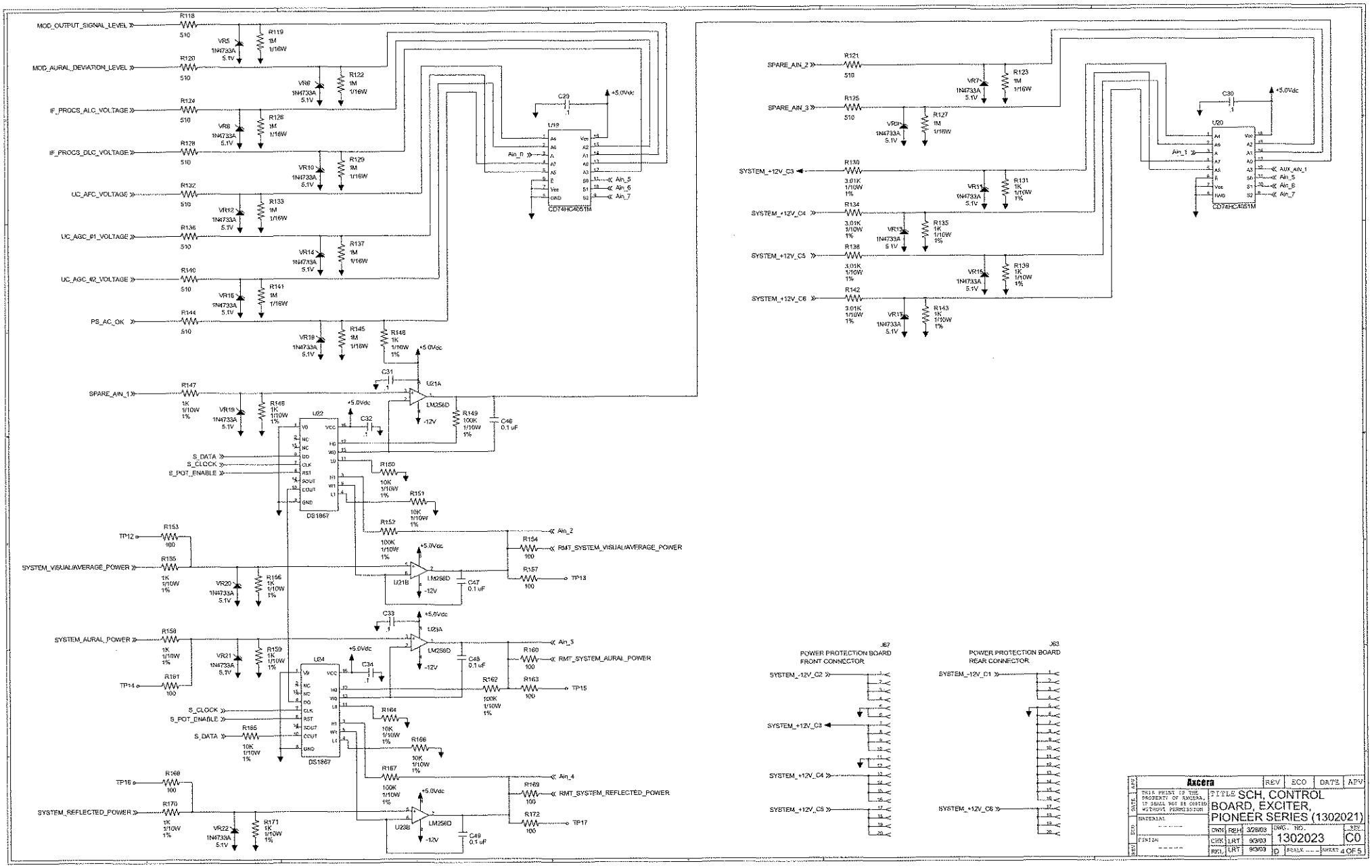
MOD_OUTPUT_SIGNAL_LEVEL
MOD_AURAL_DEVIATION_LEVEL
IF_PROCS_ALC_VOLTAGE
IF_PROCS_DLC_VOLTAGE
UC_AFC_VOLTAGE
UC_AGC_#1_VOLTAGE
UC_AGC_#2_VOLTAGE
PS_AC_OK
SPARE_AIN_1
SPARE_AIN_2
SPARE_AIN_3
SYSTEM_+12V_C3
SYSTEM_+12V_C4
SYSTEM_+12V_C5
SYSTEM_+12V_C6
S_DATA
S_CLOCK
S_POT_ENABLE
SYSTEM_VISUAL/AVERAGE_POWER
SYSTEM_AURAL_POWER
SYSTEM_REFLECTED_POWER
RMT_SYSTEM_VISUAL/AVERAGE_POWER
RMT_SYSTEM_AURAL_POWER
RMT_SYSTEM_REFLECTED_POWER
AUX_AIN_1
U19
U20
U21A
U21B
U23A
U23B
U22
U24
DS1867
LM258D
CD74HC4051M
+5.0Vdc
-12V
POWER PROTECTION BOARD FRONT CONNECTOR
POWER PROTECTION BOARD REAR CONNECTOR
SYSTEM_-12V_C2
SYSTEM_-12V_C1
SYSTEM_+12V_C3
SYSTEM_+12V_C4
SYSTEM_+12V_C5
SYSTEM_+12V_C6
Axcera
TITLE SCH, CONTROL BOARD, EXCITER, PIONEER SERIES (1302021)
DWG. NO. 1302023
C0
SHEET 4 OF 5

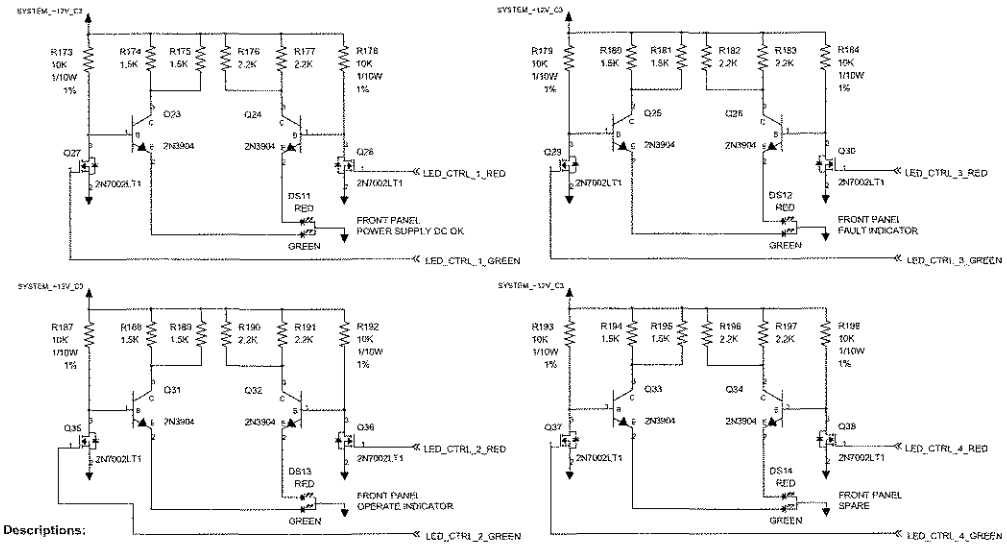

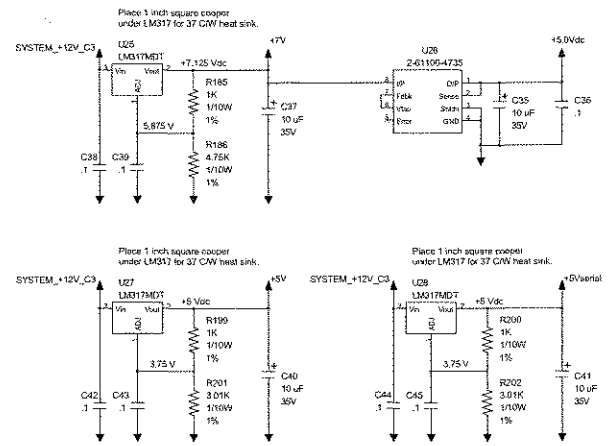

LAST USED REF.

R203
C49
Q47
DS14
U28
VR22
J63
TP17
V23
SW2
CR11
W2
Y1
L2
S1

Circuit Descriptions:

PAGE 1:

U1 is an Atmel Atmega128 microcontroller. This part is in-circuit programmed using the serial programming port. When the microcontroller is held in reset by either the programming port or the external watchdog IC, a transistor inverts the reset signal while serial programming lines are connected to U1 through analog switch U5.

U2 is a watchdog IC used to hold the microcontroller in reset if the supply voltage is less than 4.21 Vdc; (1.25 Vdc < Pin 4 (IN) < Pin 2 (Vcc)). The watchdog momentarily resets the microcontroller if Pin 6 (IST) is not clocked every second. A manual reset switch is provided but should not be needed.

Diodes DS1 through DS8 are used for display of auto test results. A test board is used to execute self test routines. When the test board is installed, Auto_Test_1 is held low and Auto_Test_2 is allowed to float at 5 Vdc. This is the signal to start the auto test routines.

U3 and U4 are used to selectively enable various input and output ICs found on page 2 and 3 of the schematic.

U1 has two serial ports available. In this application, one port is used to communicate with transmitter system components where U1 is the master of a RS-485 serial bus. The other serial port is used to provide serial data I/O where U1 is not the master of the data port. A dual RS-232 port driver IC and a RS-485 port driver is also in the second serial data I/O system. The serial ports are wired such that serial data input can come through one of the three serial port channels. Data output is sent out through each of the three serial port channels.

Switch SW1 is used to select either transmitter operation or exciter driver operation. When the switches of SW1 are on, transmitter operation is selected and the power monitoring lines of the transmitter's power amplifier are routed to the system power monitoring lines.

PAGE 2:

Digital output latches are used to control system devices. Remote output circuits are implemented using open drain FETs with greater than 60 Volt drain to source voltage ratings.

Remote digital inputs are diode protected with a 1 Kohm pull-up resistor to 5Vdc. If the remote input voltage is greater than about 2 volts or floating, a FET is turned on and a logic low is applied to the digital input buffer. If the remote input voltage is less than the turn on threshold of the FET (about 2 Vdc), a logic high is applied to the digital input buffer.

Four of the circuits on page two are auxiliary I/O connections wired for future use. They are wired similar to the remote digital inputs but include a FET for digital output operation. To operate these signals as an input, the associated output FET must be turned off. These circuits are also connected to an analog input multiplexer IC.

PAGE 3:

Several ICs are used as input buffers to allow the microcontroller to monitor various digital input values. Most digital inputs use a 10 Kohm pull-up resistor. The buffer IC used for data transfer to the display is wired for read and write control.

PAGE 4:

Each analog input is expected to be between 0 and 5 Vdc. If a signal exceeds 5.1 Vdc, a 0.225 Watt zenor diode clamps the signals voltage. Most signals are calibrated at their source however two dual serial potentiometer ICs are used to calibrate four signals. For these four circuits, the input value is divided in half before it is applied to an op-amp. The serial potentiometer is used to adjust the input signal between 80 and 120% of the input signal. Serial data to the second serial potentiometer is transferred through the first IC. The wiper position of the digital potentiometer circuit is used to set the gain of the op-amp. Lower digital values for the wiper setting increases the gain of the op-amp. If N= 0, gain = 6.0, If N = 255, gain = 3.00, If Vin = 1.0 at spare_Ain_1 and N = 128, U21A out = 4.0V with gain = 4.

Two 20 position connectors are used to provide power to the backplane. J62 and J63 get power from the power supply after a nominal 3 amp resettable fuse. The Raychem polyswitch resettable fuses may open on a current as low as 2.43 amps at 50C, 3 amps at 25 C or 3.3 amps at 0C. They definately will open when the current is 4.86 amps at 50C, 6 amps at 20C, or 6.6 amps at 0C. Trace widths of these circuits are 0.140" (designed for maximum current).

PAGE 5:

Each of the four LED circuits drive a dual element common cathode LED. To make a good amber color, the current applied to the green element is slightly greater than the red element.

Several voltage regulators are used to power the board. Seven volts is typically applied to board LEDs and to the input of a precision 5.0 volt regulator. The 5.0 volt regulator is used for analog circuits and the microcontroller analog reference voltage. Another two 5 volt regulator circuits are used for most other board circuits.

Axcera		REV	ECO	DATE	APV
THIS DRAWING IS THE PROPERTY OF AXCERA, IT SHALL NOT BE COPIED WITHOUT PERMISSION	TITLE SCH, CONTROL BOARD, EXCITER, PIONEER SERIES (1302021)				
MATERIAL ------	DWN REDH 3/28/03	DWG. NO. 1302023		REV C0	
FINISH ------	CHK LRT 9/3/03				
	REL LRT 9/3/03	D	SCALE ---	SHEET 5 OF 5	

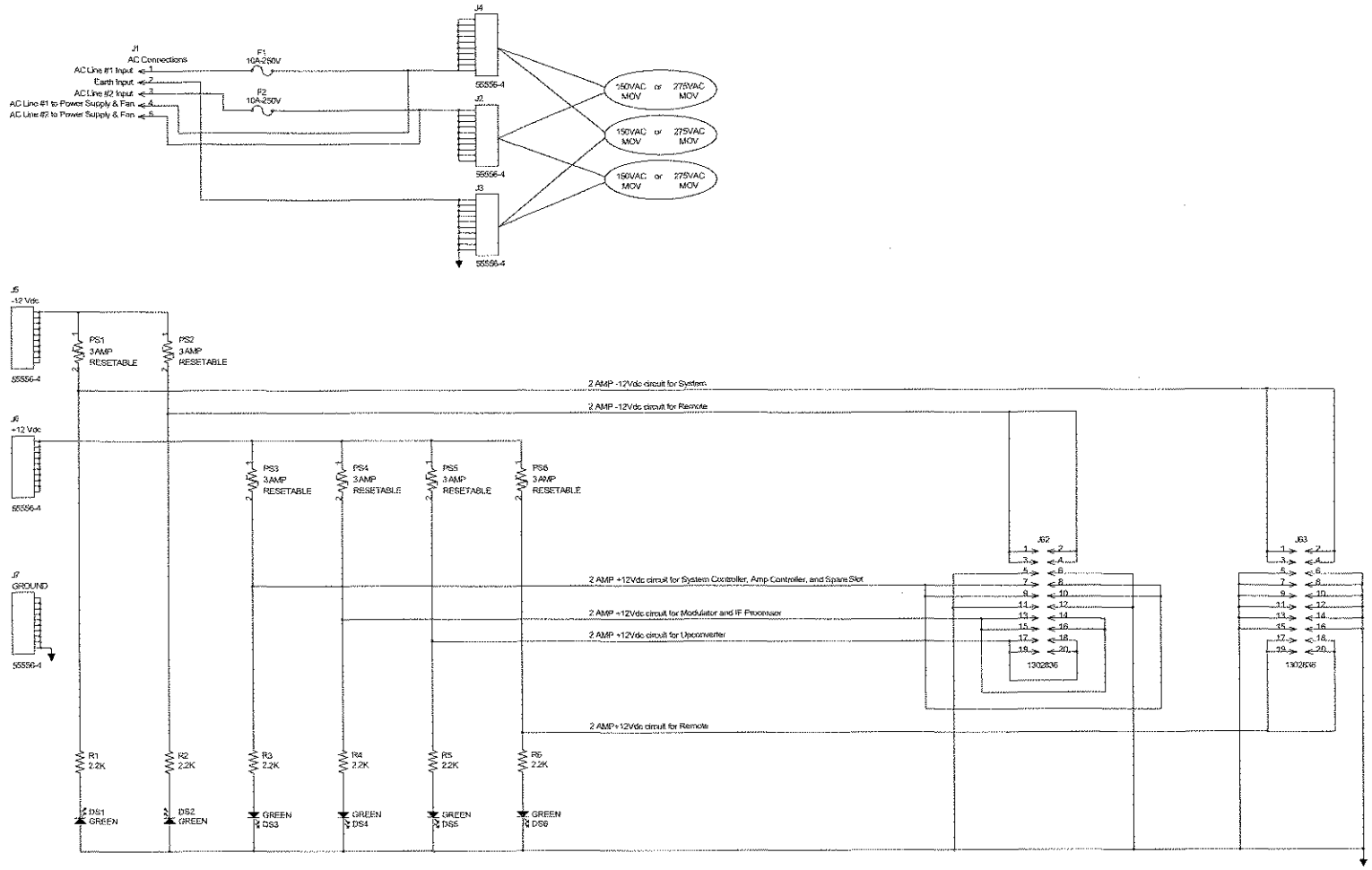

Circuit Design Notes:

1. Track widths of 0.140 inch minimum top and bottom of board shall be used to connectors to J1, J2, J3, J4.
2. Track widths of 0.140 inch minimum top of board shall be used to connections to J5 and J6.
3. Track widths of 0.065 inch minimum shall be used to connections to J62 and J63.
4. Track widths of 0.020 inch minimum shall be used to connections between LEDs and resistors.
5. Board BOM needs the following items added to those exported from Orcad:

Part Number	Qty	Description
102071	4	Fuse Clip, PC BD Mnt., 15 Amp

MATERIAL NUMBERS:
1302837 PIONEER, POWER PROTECTION
1302838 PCB, PIONEER, PWR PROTECT
1302839 SCH, PIONEER, PWR PROTECT
1302840 STENCIL FOR 1302838

Axcera		REV	ECO	DATE	APV
THIS PRINT IS THE PROPERTY OF AXCERA, IT SHALL NOT BE COPIED WITHOUT PERMISSION	TITLE: SCH, PIONEER, PWR PROTECT (1302837)				
MATERIAL ------	DWN REH 5/28/03	DWG. NO. 1302839			REV. AO
FINISH ------	CHK REH 5/28/03				
	REL REH 5/28/03	D	SCALE - - -	SHEET 1 OF 1	

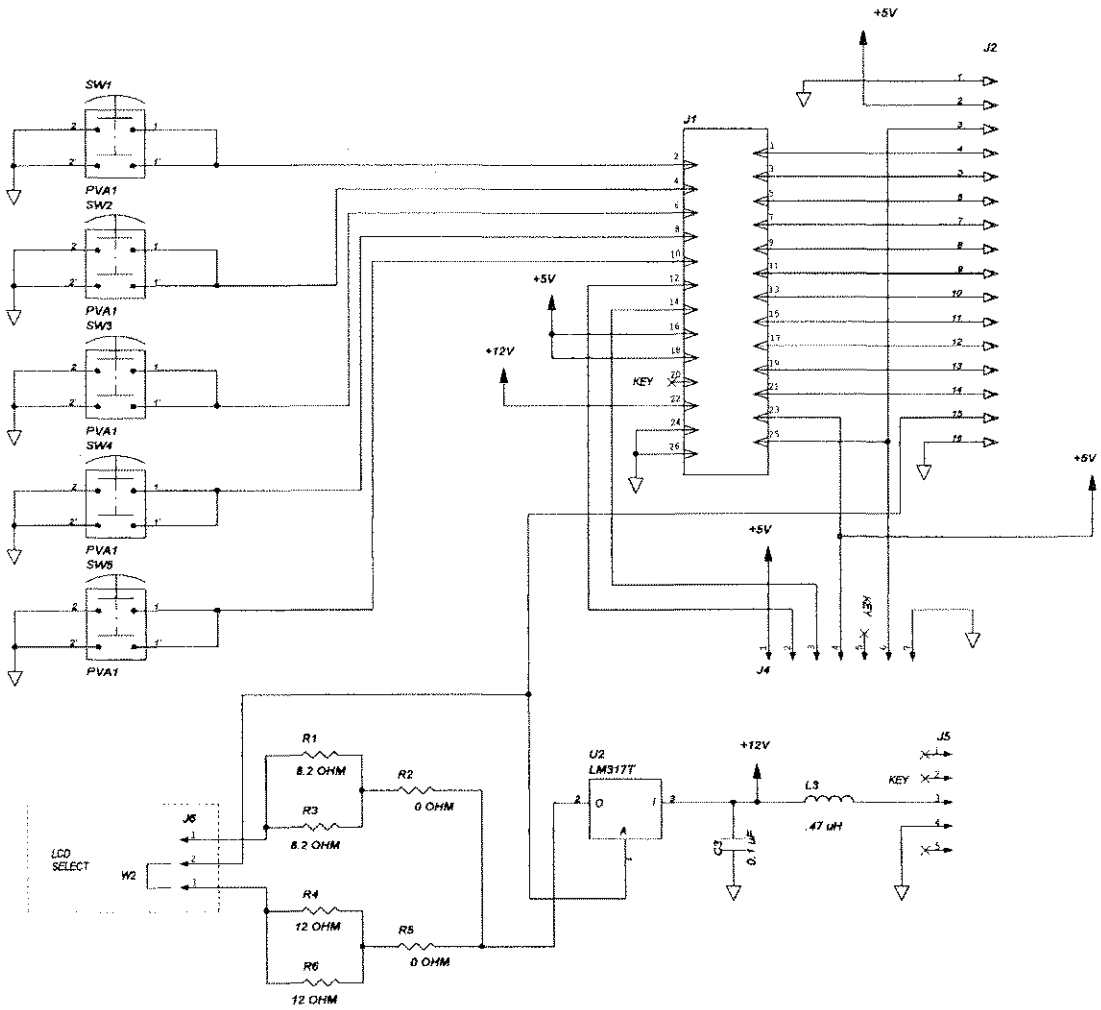

REV	ECN	DATE	APV

DELETED C1, C2, L1, L2, U1, J3, & W1. MOVED W2 FROM J6-1,-2 TO J6 -2,-3. JKF

3	8603	11/7/96	

AT J2 W2 WAS W1. (TMY)

2	8424	9/29/96	JCM

SWITCHED PINS 1 & 2 OF U2. (TMY)

1	8368	8/27/96	RAS

ITS CORPORATION

THIS PRINT IS THE PROPERTY OF ITS CORP IT SHALL NOT BE COPIED WITHOUT PERMISSION

MATERIAL ------

FINISH ------

TITLE SCHEMATIC SWITCH BOARD (1527-1406)

DWN	DLM	6/3/96	DWG. NO. 1527-3406	REV 3
CHK	RAS	6/14/96		
REL	RAS	6/14/96	B SCALE —	SHEET 1 OF 1

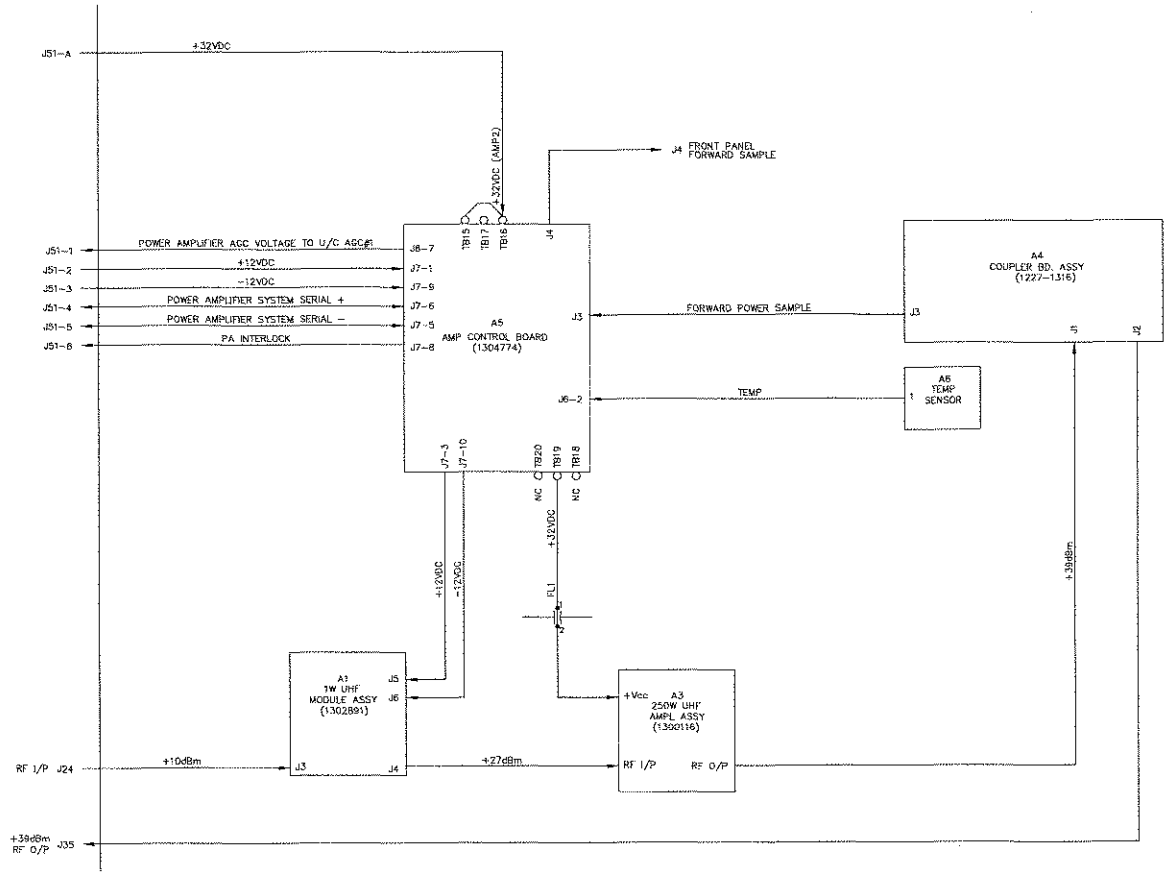

NOTE:
1. ALL POWER LEVELS ARE PK-SYNC +10% AURAL. FOR DTV LEVELS, SUBTRACT 3dBm.

REV	ECO	DATE	APV

Axcera.

THIS PRINT IS THE PROPERTY OF AXCERA. IT SHALL NOT BE COPIED WITHOUT PERMISSION.

MATERIAL ------

FINISH ------

TITLE B/D
PA ASSY, UHF INNOVATOR, HX SERIES

DWN	RGC	05/02/02
CHK	LRT	05/05/05
REL	LRT	05/05/05

DWG. NO. 1306026 REV A0

D SCALE ---- SHEET 1 OF 1

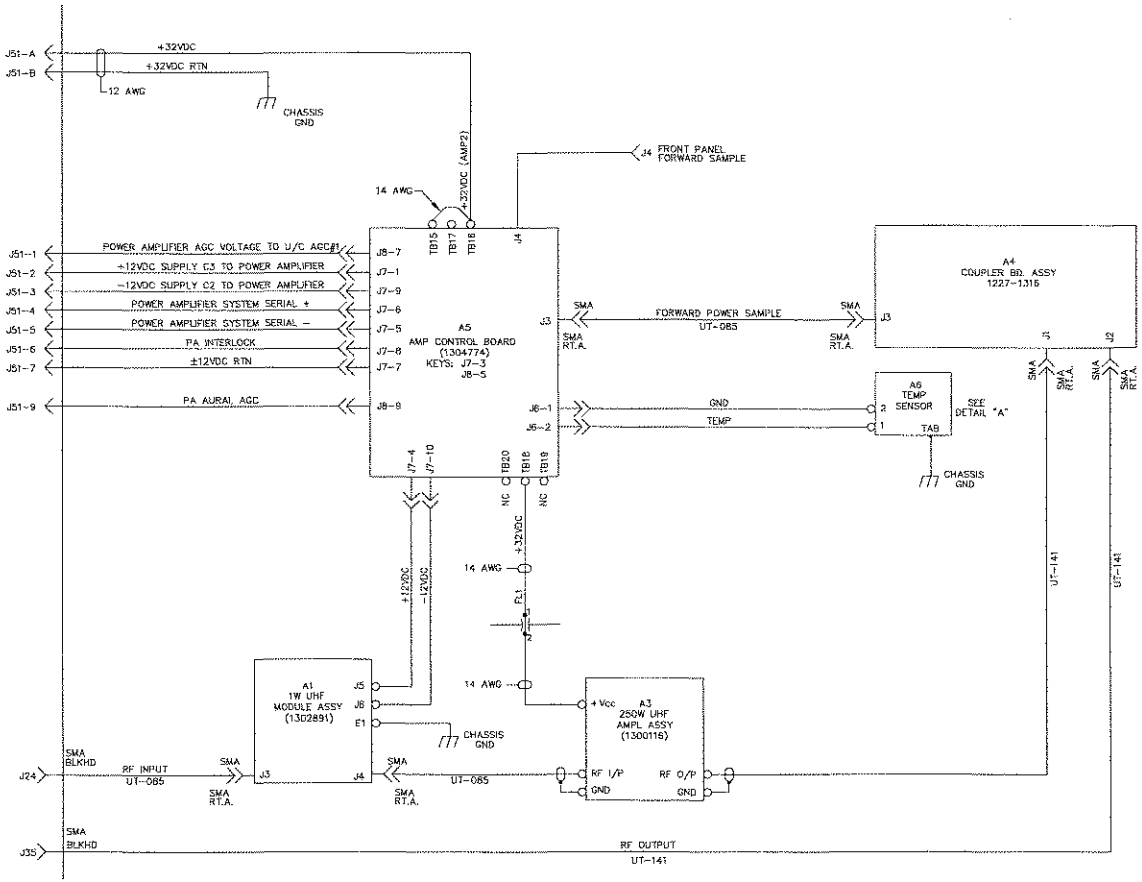

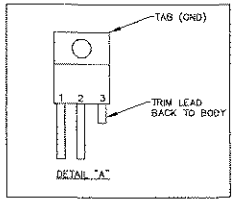

NOTE:
1. ALL WIRE IS 20AWG UNLESS OTHERWISE NOTED.

REV	ECO	DATE	APV
A5-TB18 AND TB19 WERE REVERSED. JUMPER AT A5-TB15 WAS 18 AWG. CR			
D0	20112613	6/22/07	LRT
ADDED WIRE FROM J51-9 TO A5-J8-9. (RGE)			
C0	20111950	01/31/06	LRT
A5-J7-J4 WAS A5-J7-3. (SAK)			
B0	20111826	7/21/05	LRT

Axcera®

THIS PRINT IS THE PROPERTY OF AXCERA. IT SHALL NOT BE COPIED WITHOUT PERMISSION.

MATERIAL ———
FINISH ———

TITLE: I/C, PA ASSY, UHF INNOVATOR HX SERIES

DWN	RGE	05/02/05	DWG. NO. 1306025
CHK	LRT	05/05/05	REV. D0
REL	LRT	05/05/05	D SCALE ——— SHEET 1 OF 1

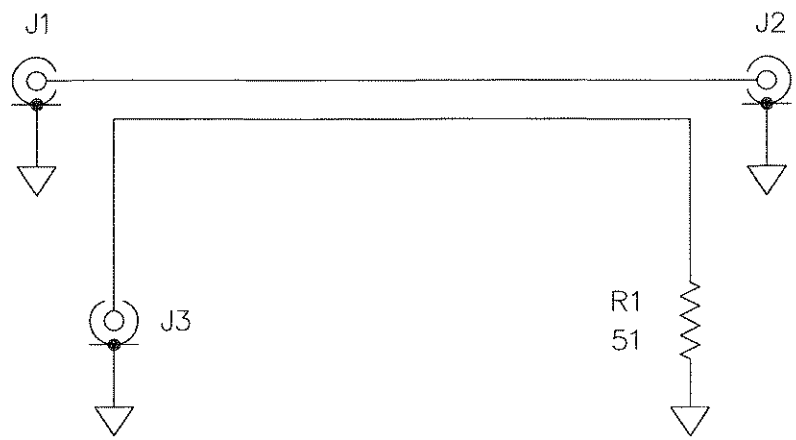

REV	ECO	DATE	APV

Axcera®

THIS PRINT IS THE PROPERTY OF AXCERA, IT SHALL NOT BE COPIED WITHOUT PERMISSION.

MATERIAL
— — — —

FINISH
— — — —

TITLE
SCHEMATIC,
UHF COUPLER ASSEMBLY
(1227–1316)

DWN	SJM	2/16/94	DWG. NO.	REV
CHK	DWB	4/11/94	1227–3316	0
REL	DWB	4/11/94	A SCALE — —	SHEET 1 OF 1

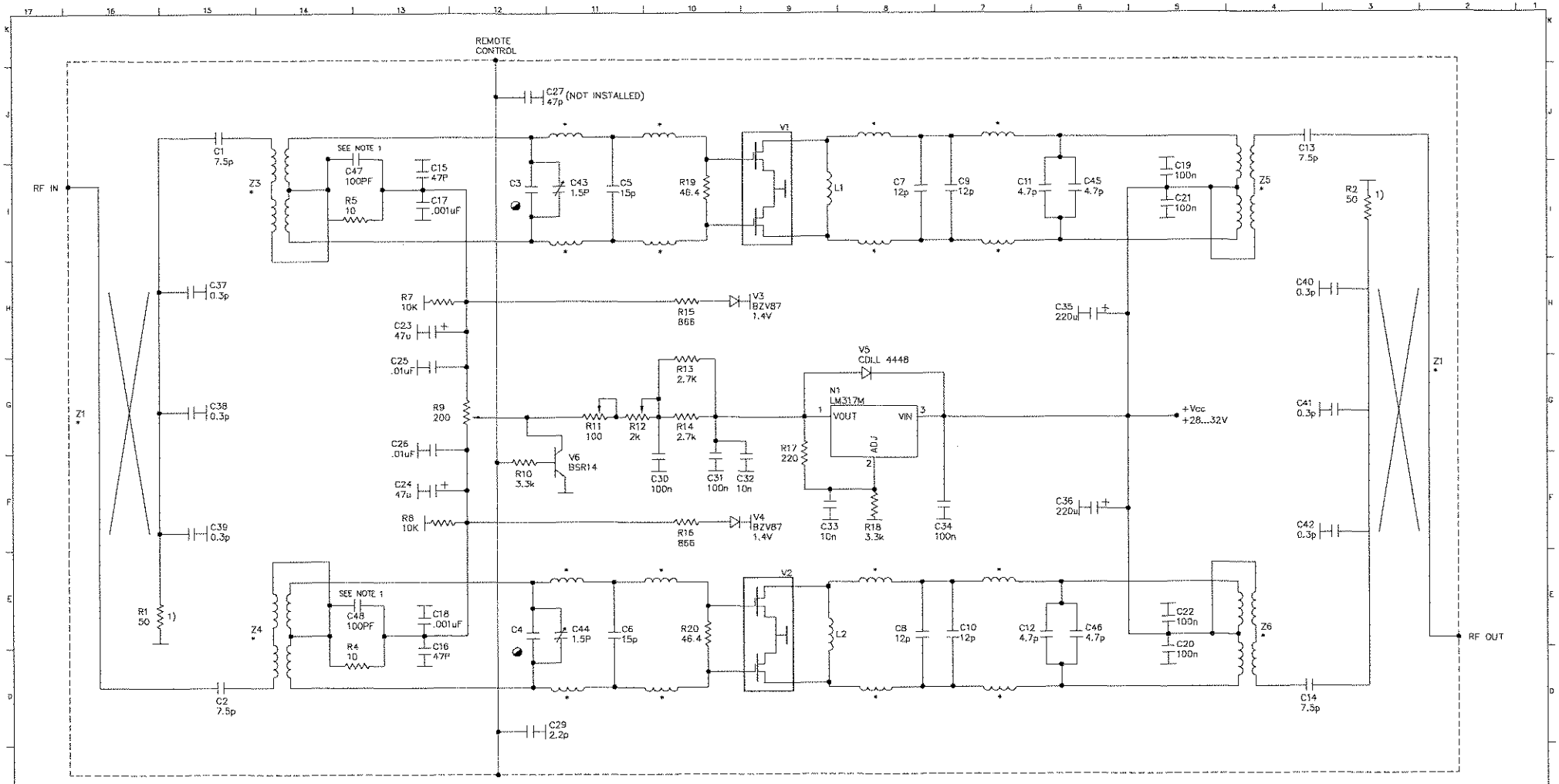

* PRINTED COMPONENT

◐ FACTORY SET VALUE

PC BOARD LAYOUT SEE 51-5379-309-00 (2)

NOTE:
1) C47 IS LOCATED IN THE R3 POSITION ON THE PCB.
C48 IS LOCATED IN THE R5 POSITION ON THE PCB.

REV	ECO	DATE	APV
B0	28B0018	04/02/02	LRT
C0	2811022	5/17/02	RE

DELETED PTF10139 P/N FROM LDMOS. ADDED C23,C24 & C27. COD/CR
R15 AND R16 WERE 680 OHMS. PWN

REV	DATE	DESCRIPTION	BY
D0	2811018	ADDED NOTE 1. JKF	
D1	2811031	R15 & R16 WERE 620 OHM. JKF	
E0	2811106	R9 WAS 50. RBE	
E1	2811106	CHANGE R3 FROM A 2.2 OHM RESISTOR TO C47, SM, CAP., 100PF, SUPVOC.	
E2	2811106	CHANGE R5 FROM A 2.2 OHM RESISTOR TO C48, SM, CAP., 100PF, SUPVOC.	
E3	2811106	CHANGE R4 FROM A 2.2 OHM RESISTOR TO 1.5W0805DCSMT, SM, RES., 10 OHM 5%	
E4	2811106	CHANGE R2 FROM 1/8W, 1W RES TO 1.5W0805DCSMT, SM, RES., 10 OHM 5%	
E5	2811106	CHANGE C17 FROM A 47PF CAP. FIXED CERAMIC, 47 PF TO 1.5W0805DCSMT, SM, CAP., .001 UF, 50 WVDC.	
E6	2811106	CHANGE C18 FROM A 47PF CAP. FIXED CERAMIC, 47 PF TO 1.5W0805DCSMT, SM, CAP., .001 UF, 50 WVDC.	
E7	2811106	ADD C23, 1.5W0805DCSMT, SM, CAP., 47UF, 50V, LOW ESR.	
E8	2811106	ADD C24, 1.5W0805DCSMT, SM, CAP., 47UF, 50V, LOW ESR.	
E9	2811106	ADD C25, 1.5W0805DCSMT, SM, CAP., .01 UF, 50 WVDC.	
E10	2811106	ADD C26, 1.5W0805DCSMT, SM, CAP., .01 UF, 50 WVDC.	
D0	2811106	PWN	RJ

Axcera.

THIS PRINT IS THE PROPERTY OF AXCERA, IT SHALL NOT BE COPIED WITHOUT PERMISSION.

MATERIAL

FINISH

TITLE AMPLIFIER MODULE

DWN	PWN	04/01/02	DWG. NO.
CHK	LRT	04/03/02	51-5379-309-00 WSR
REL	LRT	04/03/02	SCALE

REV GO

SHEET 1 OF 1

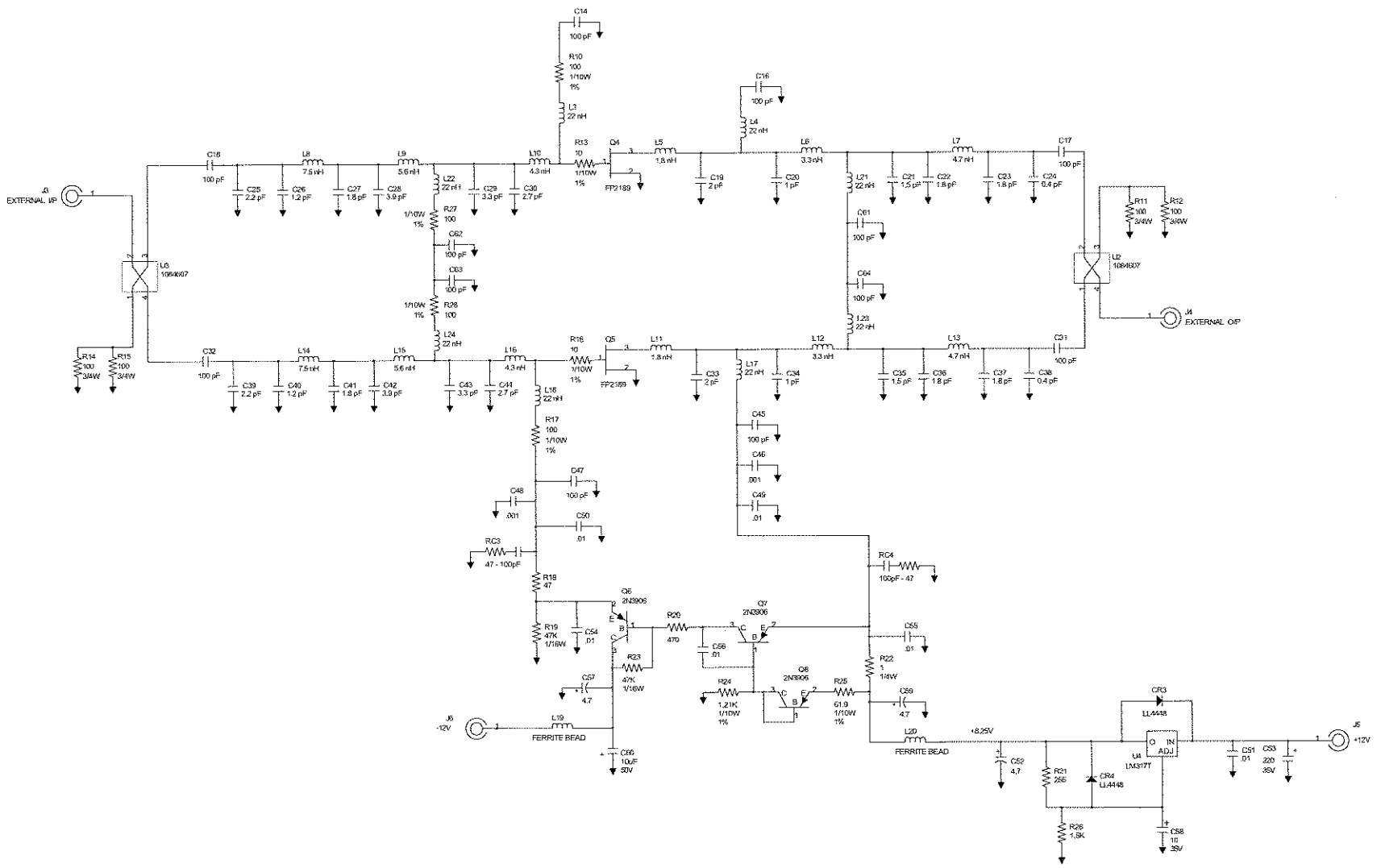

C25, C26, C39 & C40 WERE 0.2pF. C27, C28, C41 & C42 WERE 0.9pF. C29 & C43 WERE 1.8pF. C30 & C44 WERE NOT USED. C17, C19, C31 & C33 WERE 1pF. C20 & C34 WERE 0.8pF. C22 & C36 WERE 1.5pF. C23 & C37 WERE 4.7pF. L3, L18, L22 & L24 WERE 27nH. L8, L9, L14 & L15 WERE 1.8nH. L7, L13, L6 & L12 WERE 4.3nH. L4, L17, L21 & L23 WERE 33nH. L5 & L11 WERE 1.6nH. L10 & L16 WERE 3.9nH. R21 WAS 220. R24 WAS 3.9K. R25 WAS 130.
JKF

REV	ECO	DATE	APV
B0	2011-098	11/2/03	DJ

Axcera

THIS DRAWING IS THE PROPERTY OF AXCERA, IT SHALL NOT BE COPIED WITHOUT PERMISSION

MATERIAL ------

FINISH ------

TITLE SCH., 1 WATT UHF AMPLIFIER (1302761)

DWN	JKF	5/12/03	
CHK	LRT	9/3/03	
REL	LRT	9/3/03	D

DWG. NO. 1302762 REV B0

SCALE ---- SHEET 1 OF 1

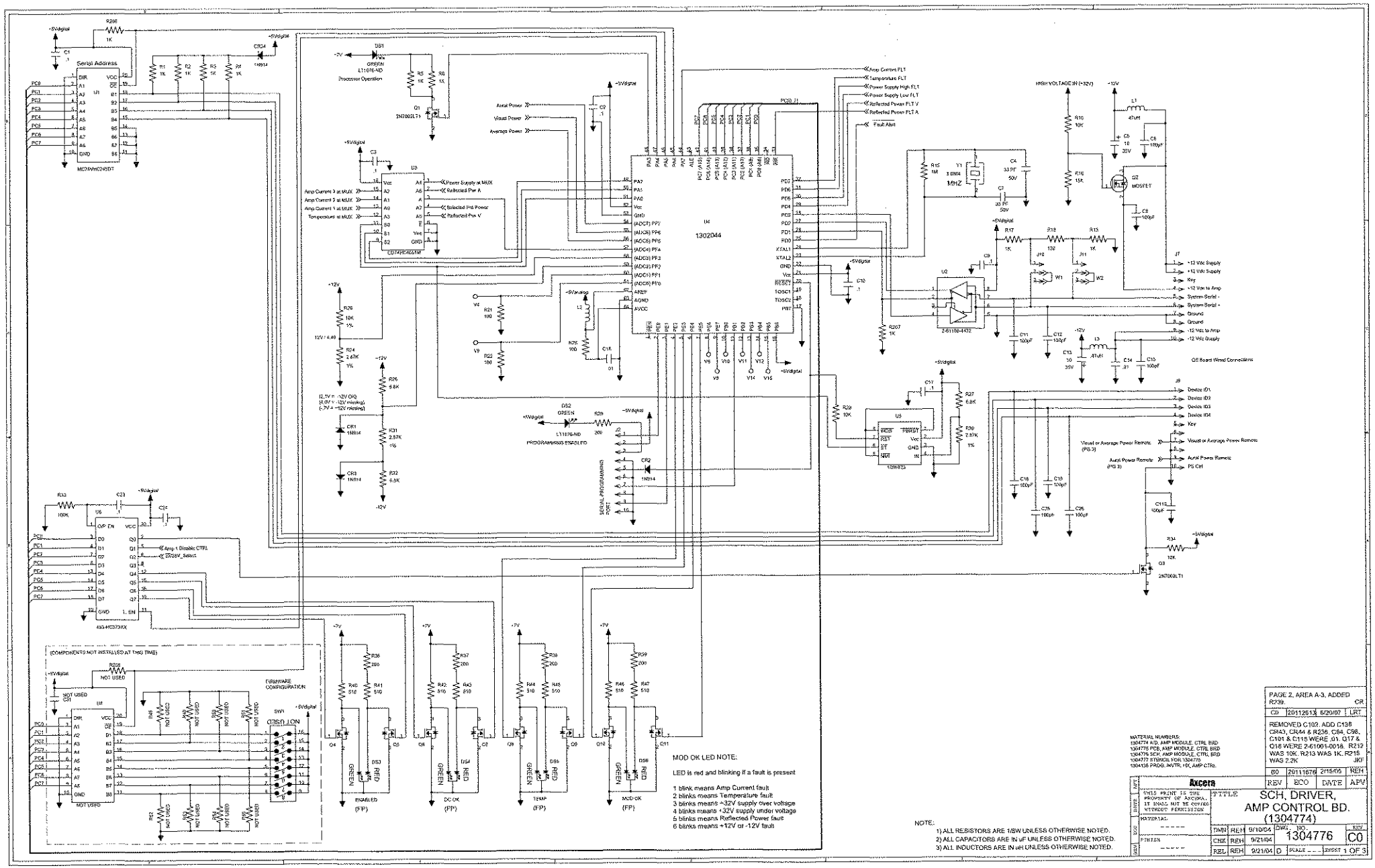
Serial Address
MC74VHC245DT
Processor Operation
Amp Current 3 at MUX
Amp Current 2 at MUX
Amp Current 1 at MUX
Temperature at MUX
Power Supply at MUX
Reflected Pwr A
Reflected Pwr B
Reflected Pwr V
Avial Power
Visual Power
Average Power
Amp Carrier FLT
Temperature FLT
Power Supply High FLT
Power Supply Low FLT
Reflected Power FLT V
Reflected Power FLT A
Fault Alert
HIGH VOLTAGE IN (+32V)
MHZ
MOSFET
+12 Vdc Supply
+12 Vdc Supply
Key
+12 Vdc to Amp
System Serial +
System Serial -
Ground
Ground
-12 Vdc to Amp
-12 Vdc Supply
Off Board Wired Connections
Device ID1
Device ID2
Device ID3
Device ID4
Key
Visual or Average Power Remote
Avial Power Remote
PS Ctrl
PROGRAMMING ENABLED
SERIAL PROGRAMMING PORT
Amp 1 Disable CTRL
5V/28V_Select
(COMPONENTS NOT INSTALLED AT THIS TIME)
NOT USED
TERMINATE CONFIGURATION
ENABLED (FP)
DC OK (FP)
TEMP (FP)
MOD OK (FP)
MOD OK LED NOTE:
LED is red and blinking if a fault is present
1 blink means Amp Current fault
2 blinks means Temperature fault
3 blinks means +32V supply over voltage
4 blinks means +32V supply under voltage
5 blinks means Reflected Power fault
6 blinks means +12V or -12V fault
NOTE:
1) ALL RESISTORS ARE 1/8W UNLESS OTHERWISE NOTED.
2) ALL CAPACITORS ARE IN uF UNLESS OTHERWISE NOTED.
3) ALL INDUCTORS ARE IN uH UNLESS OTHERWISE NOTED.
MATERIAL NUMBERS:
1304774 A/D, AMP MODULE, CTRL BRD
1304775 PCB, AMP MODULE, CTRL BRD
1304776 SCH, AMP MODULE, CTRL BRD
1304777 STENCIL FOR 1304776
1304135 PROG. INTR. HX, AMP CTRs.
PAGE 2, AREA A-3, ADDED R339. CR
CO 20112613 6/20/07 LRT
REMOVED C102. ADD C138 CR43, CR44 & R236. C84, C98, C101 & C115 WERE .01. Q17 & C16 WERE 2-61001-0018. R212 WAS 10K. R213 WAS 1K. R215 WAS 2.2K JKF
B0 20111676 2/15/05 REH
Axcera
REV ECO DATE APV
THIS PRINT IS THE PROPERTY OF AXCERA, IT SHALL NOT BE COPIED WITHOUT PERMISSION
TITLE
SCH, DRIVER, AMP CONTROL BD. (1304774)
MATERIAL
FINISH
DWN REH 9/10/04
CHK REH 9/21/04
REL REH 9/21/04 D
DWG. NO. 1304776
REV C0
SCALE ---
SHEET 1 OF 3

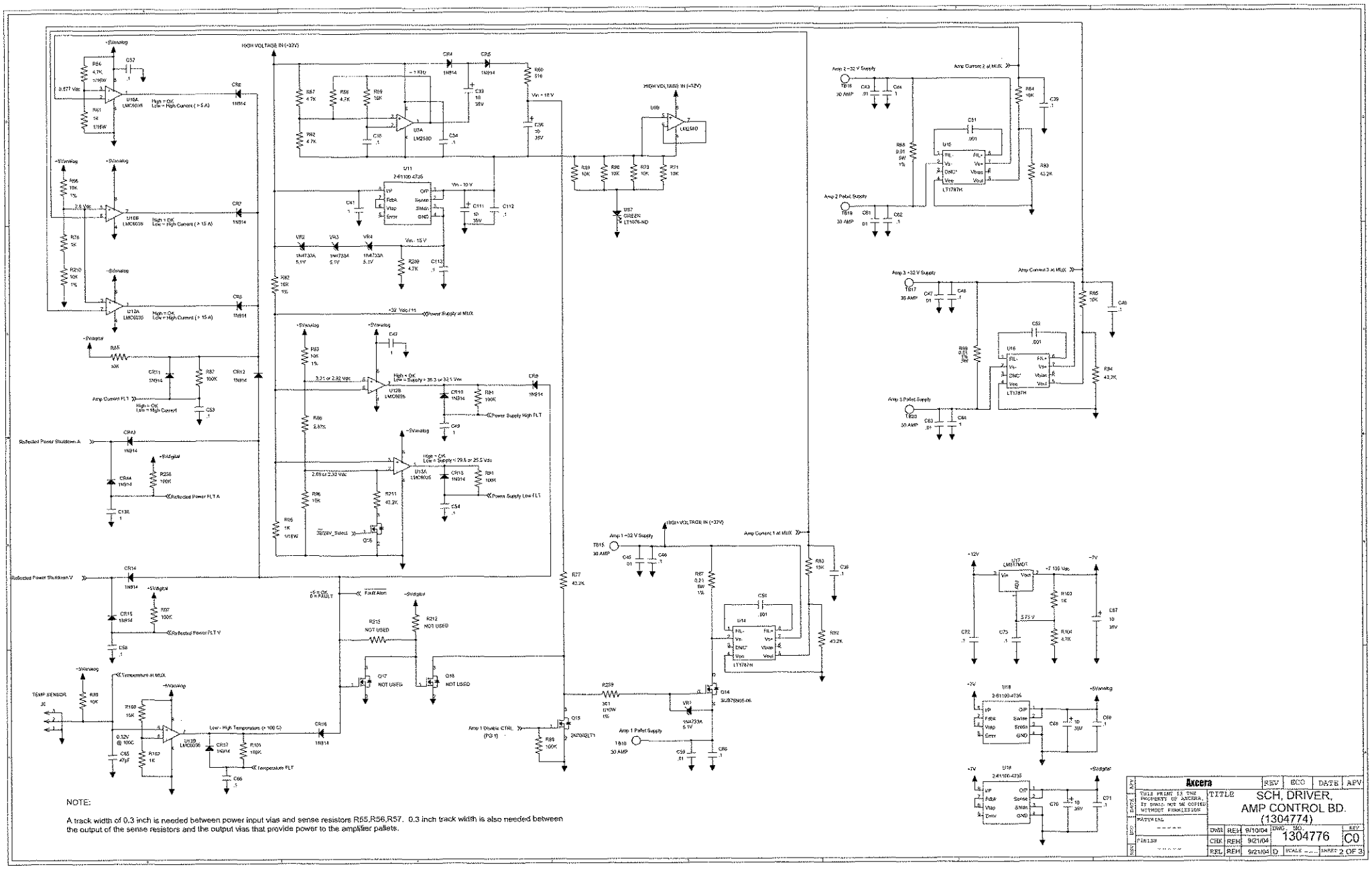

NOTE:

A track width of 0.3 inch is needed between power input vias and sense resistors R55,R56,R57. 0.3 inch track width is also needed between the output of the sense resistors and the output vias that provide power to the amplifier pallets.

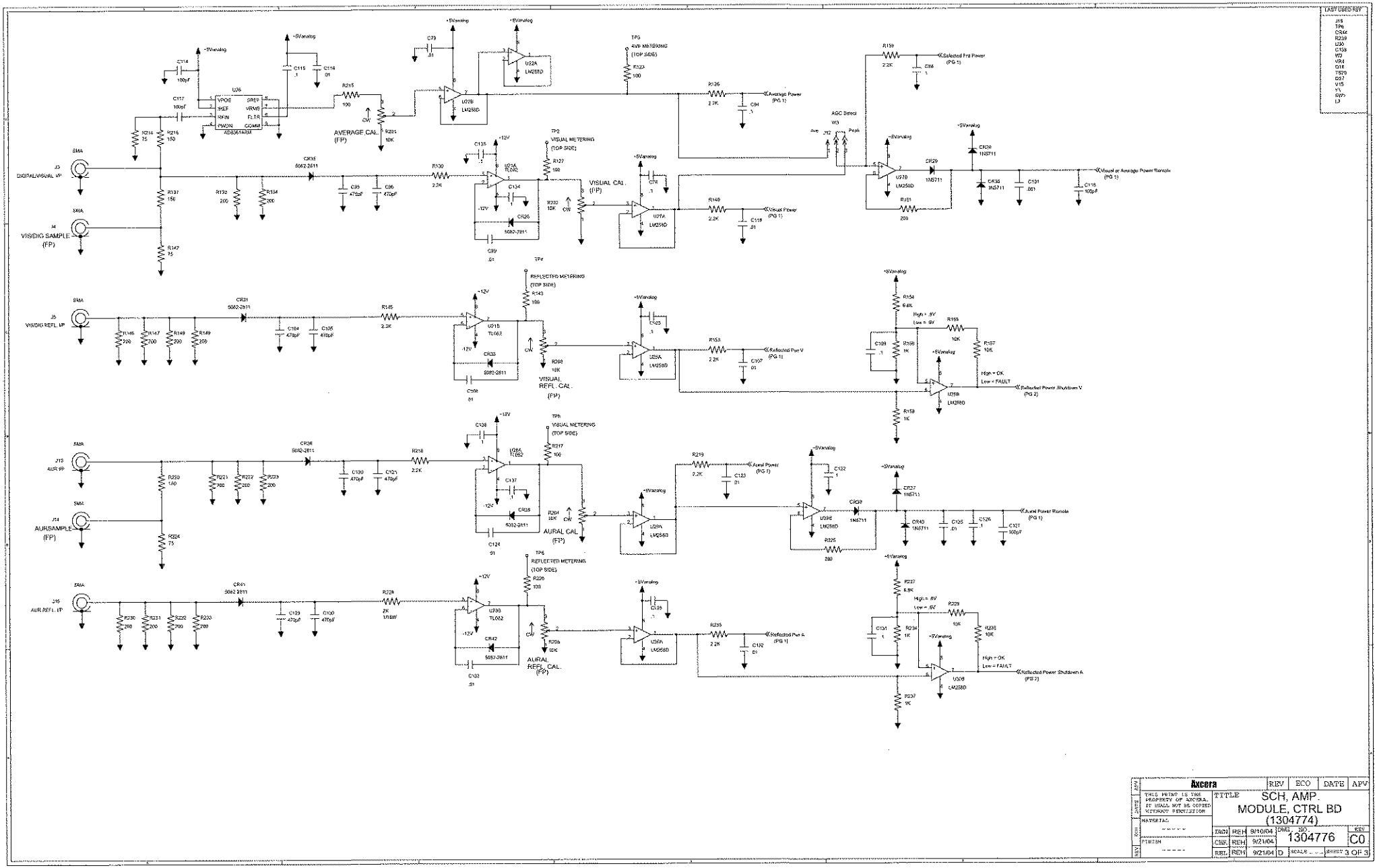
LAST USED REF
J16
TP6
CR44
R239
U30
C135
VR3
CR8
TP7
D57
V15
V1
SVP
L3
+5Vanalog
-5Vanalog
-12V
U76
AD8361ASM
VPOS
SREF
VREF
VRMS
RFIN
FLTR
PWDN
COMM
C114
C115
C116
C117
100pF
R214
75
R216
150
R215
100
AVERAGE CAL.
(FP)
R201
10K
C79
.01
U22A
LM258D
U22B
LM258D
TP5
AVE METERING
(TOP SIDE)
R120
100
R126
2.2K
C84
.1
Average Power
(PG 1)
R159
2.2K
C86
.1
Reflected Fwd Power
(PG 1)
AGC Select
Ave
J12
Peak
U27B
LM258D
CR29
1N5711
CR28
1N5711
CR30
1N5711
C101
.001
C118
100pF
Visual or Average Power Remote
(PG 1)
R151
200
SMA
J3
DIGITAL/VISUAL VP
J4
VIS/DIG SAMPLE
(FP)
R137
150
R147
75
R132
200
R134
200
CR34
5082-2811
C95
470pF
C96
470pF
R130
2.2K
U27A
TL062
C134
CR26
5082-2811
C89
.01
TP2
VISUAL METERING
(TOP SIDE)
R127
100
R132
10K
VISUAL CAL.
(FP)
C78
.1
U27A
LM258D
R149
2.2K
C119
.01
Visual Power
(PG 1)
J5
VIS/DIG REFL. VP
R146
200
R147
200
R149
200
R148
200
CR31
5082-2811
C104
470pF
C105
470pF
R145
2.2K
U31B
TL062
CR33
5082-2811
C108
.01
TP4
REFLECTED METERING
(TOP SIDE)
R143
100
R208
10K
VISUAL
REFL. CAL.
(FP)
C103
.1
U28A
LM258D
R153
2.2K
C107
.01
Reflected Pwr V
(PG 1)
R154
6.8K
High = .8V
Low = .6V
R165
10K
C109
.1
R156
1K
R157
10K
High = OK
Low = FAULT
U28B
LM258D
R158
1K
Reflected Power Shutdown V
(PG 2)
J13
AUR VP
J14
AURSAMPLE
(FP)
R230
100
R221
200
R222
200
R223
200
CR36
5082-2811
C120
470pF
C121
470pF
R218
2.2K
U29A
TL062
C137
.1
CR35
5082-2811
C124
.01
TP5
VISUAL METERING
(TOP SIDE)
R217
100
R204
10K
AURAL CAL
(FP)
R219
2.2K
C123
.01
U29A
LM258D
C122
.1
U29B
LM258D
CR39
1N5711
CR37
1N5711
CR40
1N5711
C125
.01
C126
.1
C127
100pF
Aural Power Remote
(PG 1)
R225
200
J15
AUR REFL. VP
R236
200
R231
200
R232
200
R233
200
CR41
5082-2811
C129
470pF
C130
470pF
R228
2K
1/16W
U29B
TL062
CR42
5082-2811
C132
.01
TP6
REFLECTED METERING
(TOP SIDE)
R206
100
R206
10K
AURAL
REFL. CAL.
(FP)
C138
.1
U30A
LM258D
R235
2.2K
C142
.01
Reflected Pwr A
(PG 1)
R227
6.8K
High = .8V
Low = .6V
R229
10K
C131
.1
R234
1K
R238
10K
High = OK
Low = FAULT
U30B
LM258D
R237
1K
Reflected Power Shutdown A
(PG 2)
Axcera
THIS PRINT IS THE PROPERTY OF AXCERA. IT SHALL NOT BE COPIED WITHOUT PERMISSION
MATERIAL
FINISH
TITLE
SCH, AMP. MODULE, CTRL BD (1304774)
REV
ECO
DATE
APV
DRN
RCH
9/10/04
CHK
RCH
9/21/04
APV
RCH
9/21/04
DWG. NO.
1304776
REV
C0
SCALE
SHEET 3 OF 3

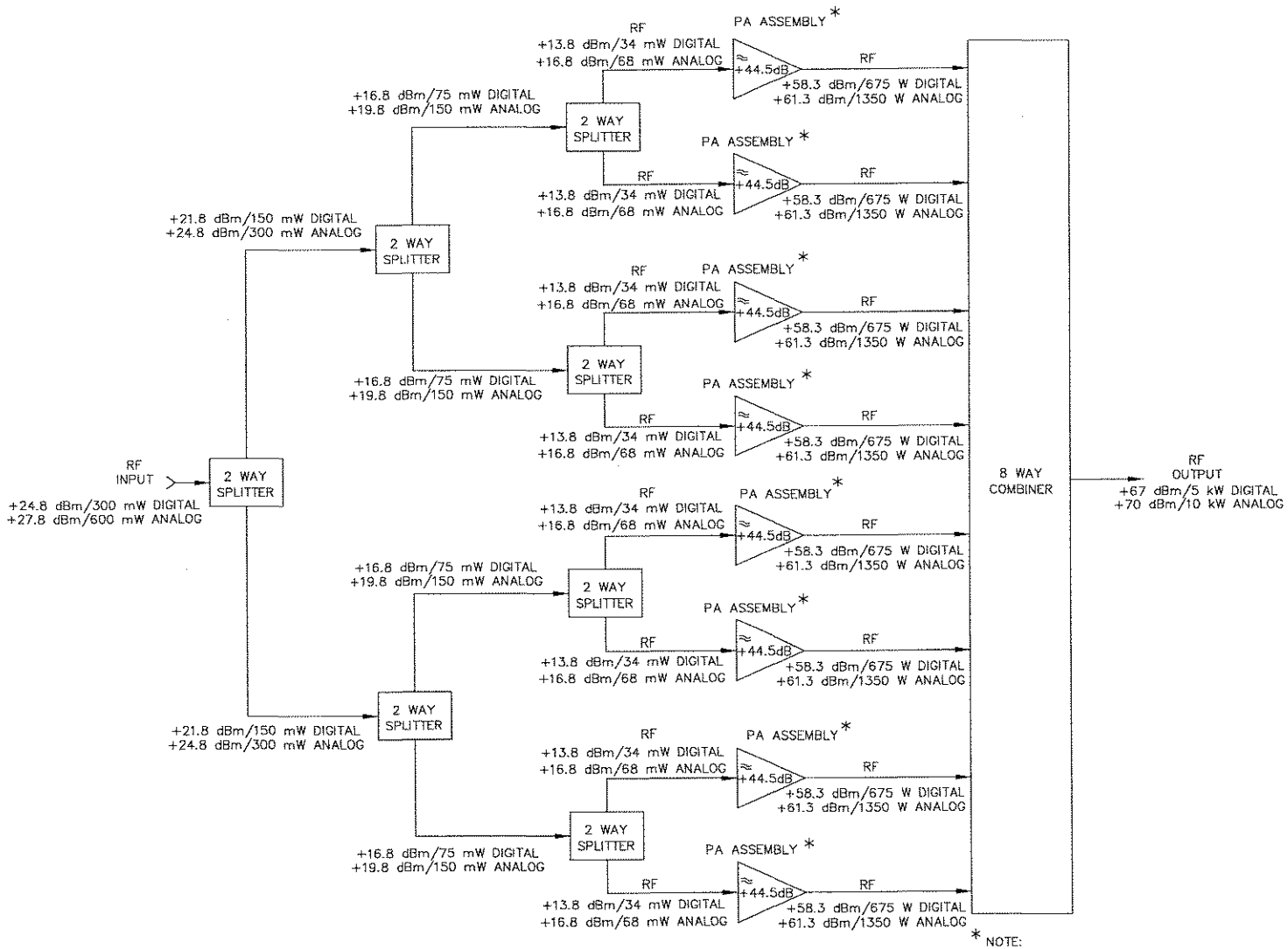

* NOTE:
THE PA ASSEMBLY'S GAIN WILL VARY WITH FREQUENCY.

≈ IS THE SYMBOL FOR APPROXIMATELY.

REV	ECO	DATE	APV
B0	20112064	3/9/06	LRT

INPUT LEVEL WAS +26dBm & +27.8dBm OTHER LEVELS CHANGED AT SAME RATIO.
CDD

Axcera.

THIS PRINT IS THE PROPERTY OF AXCERA. IT SHALL NOT BE COPIED WITHOUT PERMISSION.

MATERIAL — — — —

FINISH — — — —

TITLE BLOCK DIAGRAM — HX AMPLIFIER CABINET, UHF, 8-WAY

DWN	CDD	11/11/05	DWG. NO. 1306714	REV B0
CHK	LRT	11/11/05		
REL	LRT	11/11/05	C SCALE — —	SHEET 1 OF 1

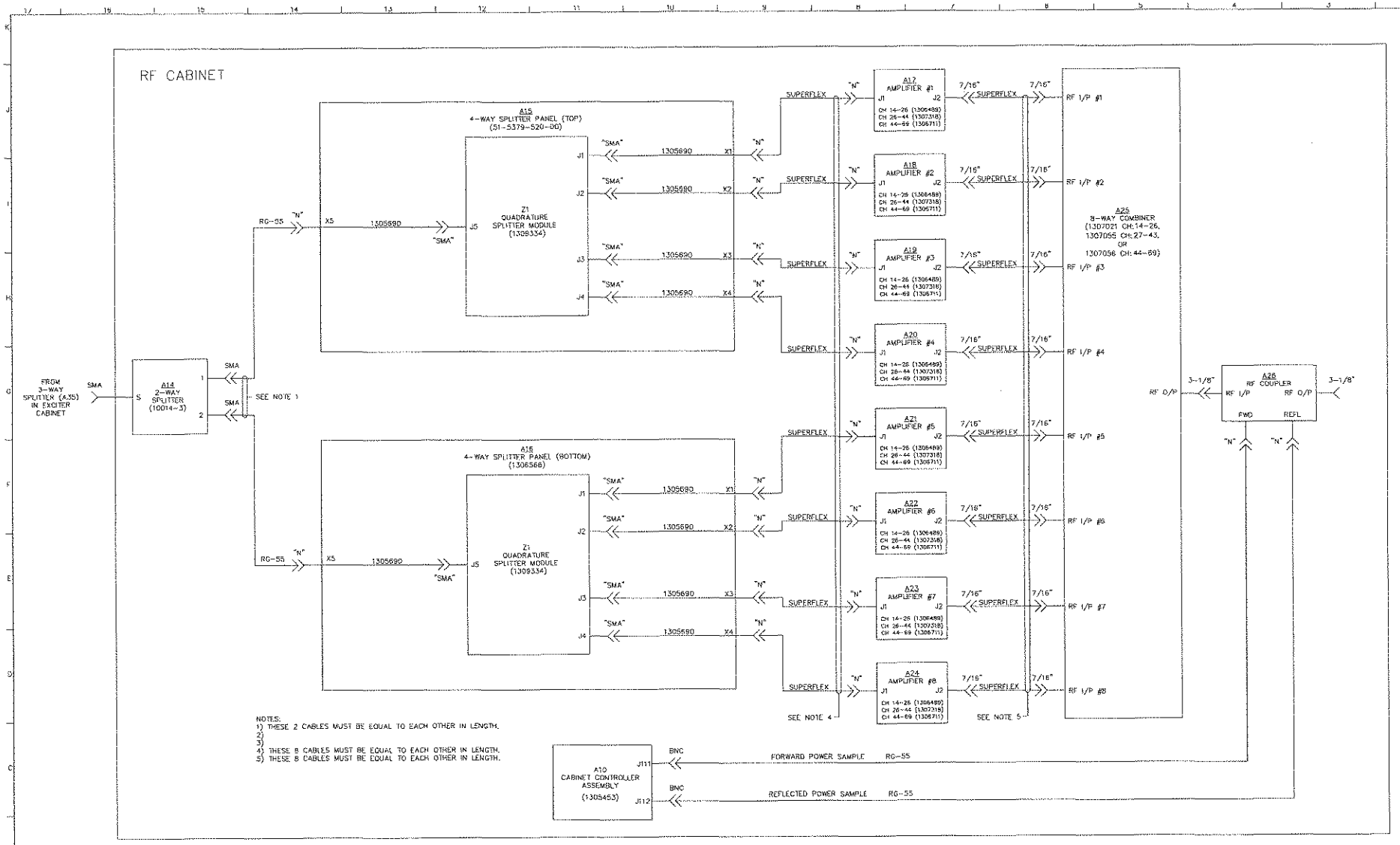

REV	ECO	DATE	APV
A14 WAS ZFSC-2-5MA.			(SAK)
E0	20112702	9/12/07	GJN
AT A15 AND A16: DELETED Z1, Z2, & Z3 (TL-493b-001-38) 2 WAY SPLITTERS, RG-55 COAX, AND REFERENCES TO NOTE 2 & 3. AT A15 AND A16: ADDED Z1 (1309334) QUAD SPLITTER MODULE AND 1305690 COAX ASSY. (8 PLACES). DELETED NOTE 2 AND 3.			(SAK)
D0	20112683	8/16/07	GJN
ADDED PART NUMBERS FOR ALTERNATE UHF AMPLIFIER MODULES. A10 WAS 1305305.			WB
C0	20112344	11/02/06	JCM
A22 WAS AMP #5, A23 WAS AMP #6 & A24 WAS AMP #7. A25 WAS 51-5379-561-00.			CDD
B0	20112064	3/9/06	LRT

Axcera.

THIS PRINT IS THE PROPERTY OF AXCERA, IT SHALL NOT BE COPIED WITHOUT PERMISSION.

MATERIAL

FINISH

TITLE I/C, RF SIGNAL, RF CABINET, UHF INNOVATOR HX

DWN	RGE	10/17/05
CHK	JCM	11/28/05
REL	JCM	11/28/05

DWG. NO. 1306574 REV. E0

D SCALE ------ SHEET 1 OF 1

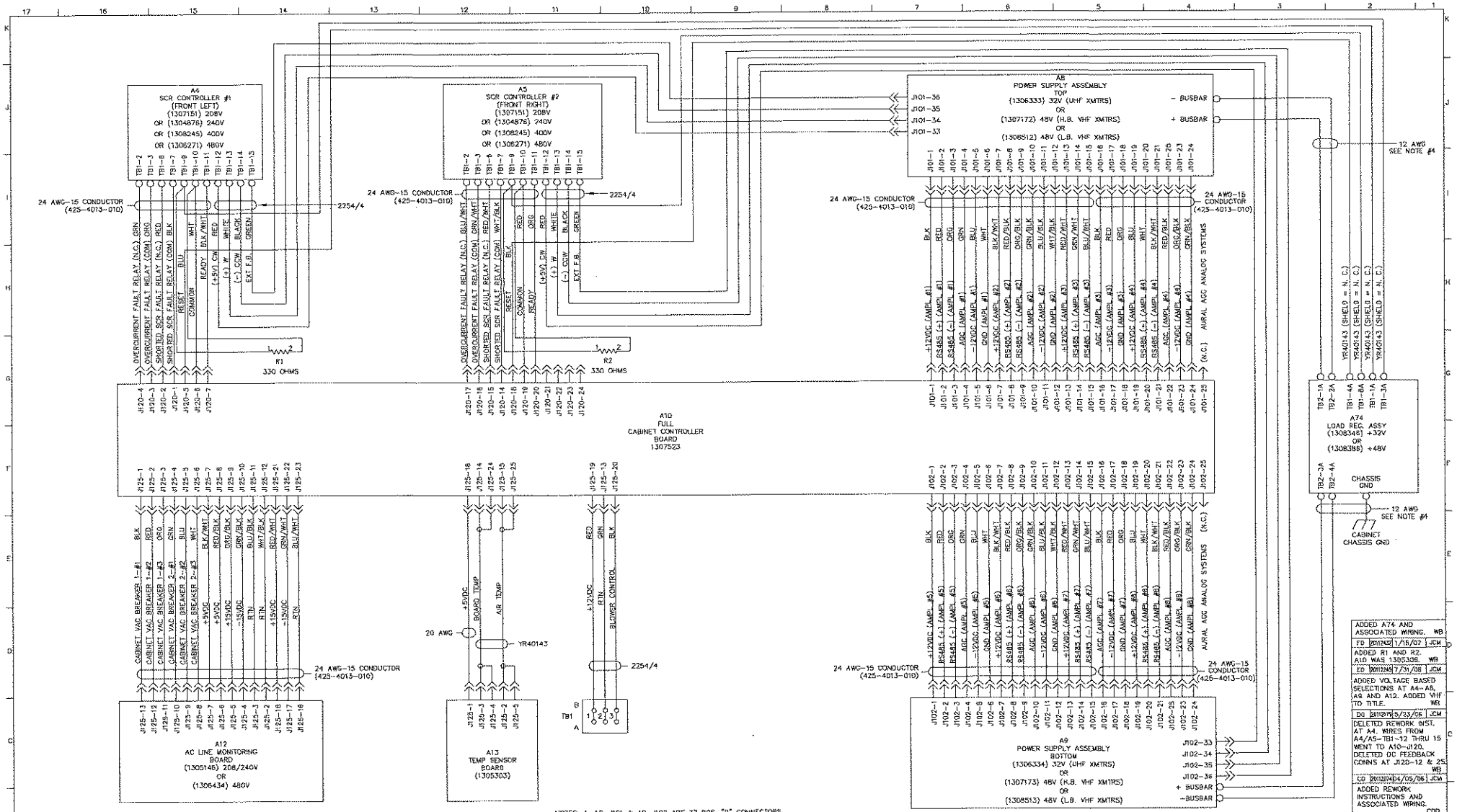

NOTES: 1. A8-J101 & A9-J102 ARE 37 POS. "D" CONNECTORS.

2. A12-J125, A10-J120, A10-J125, A10-J101 AND A10-J102 ARE 25 POS. "D" CONNECTORS.

3. A13-J125 IS A 9 POS. "D" CONNECTOR.

4. WIRE IS SHOWN FOR REFERENCE ONLY AND IS NOT PART OF THE CONTROL HARNESS.

REV	ECO	DATE	APV
BG	20112084	3/9/06	LRT
CO	20112074	04/05/06	JCM
			CDD
CO	20112279	5/23/06	JCM
			WB
CO	20112249	7/31/06	JCM
			WB
CO	20112242	1/18/07	JCM
			WB

ADDED A74 AND ASSOCIATED WIRING. WB

ADDED R1 AND R2. A10 WAS 1305305. WB

ADDED VOLTAGE BASED SELECTIONS AT A4-A8, A9 AND A12. ADDED VHF TO TITLE. WB

DELETED REWORK INST. AT A4. WIRES FROM A4/A5-TB1-12 THRU 15 WENT TO A10-J120. DELETED OC FEEDBACK CONNS AT J120-12 & 25. WB

ADDED REWORK INSTRUCTIONS AND ASSOCIATED WIRING.

Axcera.

THIS PRINT IS THE PROPERTY OF AXCERA, IT SHALL NOT BE COPIED WITHOUT PERMISSION.

MATERIAL ------

FINISH ------

TITLE I/C, CONTROL, RF CAB VHF/UHF, 2, 6 & 8-WAY COMBINING, INT DPLXED

DWN	RGE	10/7/05	DWG. NO. 1306573
CHK	LRT	11/29/05	REV FQ
REL	LRT	11/29/05	D SCALE — SHEET 1 OF 1

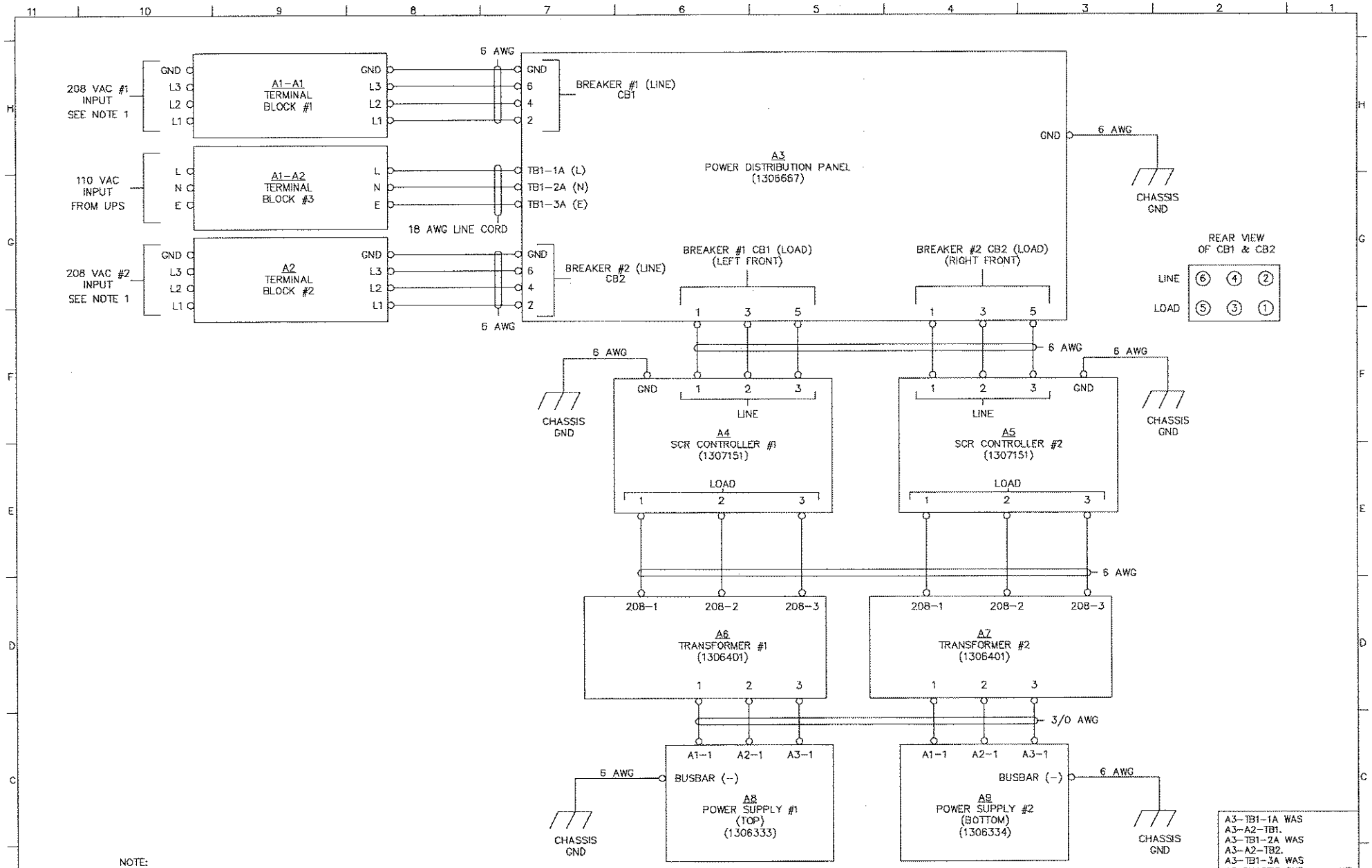

NOTE:
1.) ON DELTA 3 PHASE INSTALLATIONS, CONNECT "HIGH-LEG" OR "WILD-LEG" TO L1.

REV	ECO	DATE	APV
B0	20112344	11/02/06	JCM

A3-TB1-1A WAS A3-A2-TB1.
A3-TB1-2A WAS A3-A2-TB2.
A3-TB1-3A WAS A3 CHASSIS GND. WB

Axcera.

THIS PRINT IS THE PROPERTY OF AXCERA. IT SHALL NOT BE COPIED WITHOUT PERMISSION.

MATERIAL ------

FINISH ------

TITLE I/C, AC HARNESS, RF CABINET, INNOVATOR HX, UHF, 208V

DWN	SAK	4/13/06	DWG. NO. 1307335	REV B0
CHK	JCM	7/7/06		
REL	JCM	7/7/06	C SCALE ------	SHEET 1 OF 1

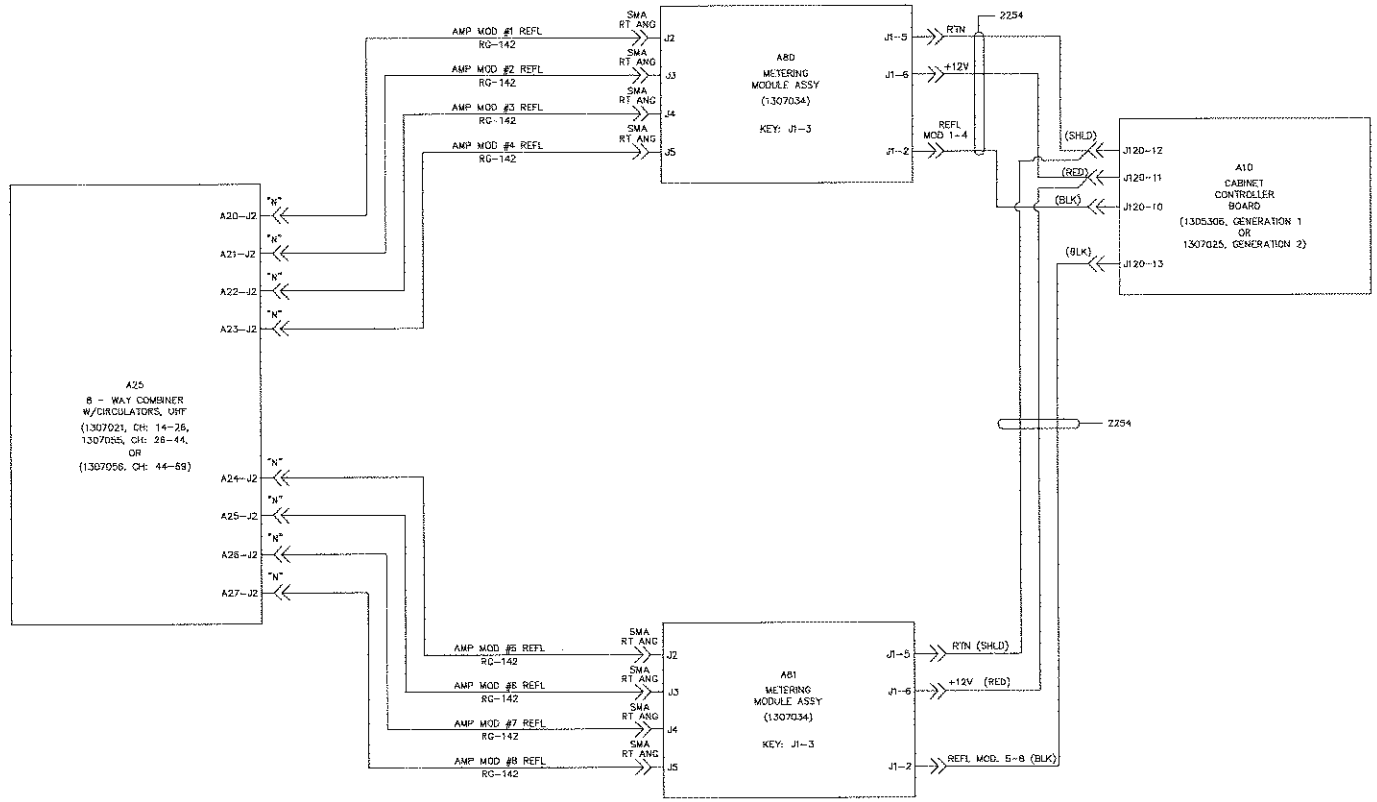

REV	ECO	DATE	APV
B0	0013445	1/25/07	JCM

DELETED A3. A80 AND A81 WERE PREVIOUSLY POWERED BY A3.

Axcera.

THIS PRINT IS THE PROPERTY OF AXCERA. IT SHALL NOT BE COPIED WITHOUT PERMISSION.

MATERIAL ——

FINISH ——

TITLE I/C, MTRG. INTERFACE, 8 WAY COMB. W/CIRCULATORS

DWN	SAK	2/13/06
CHK	JCM	2/27/06
REL	JCM	2/27/06

DWG. NO. 1307042 REV B0

D SCALE ——— SHEET 1 OF 1

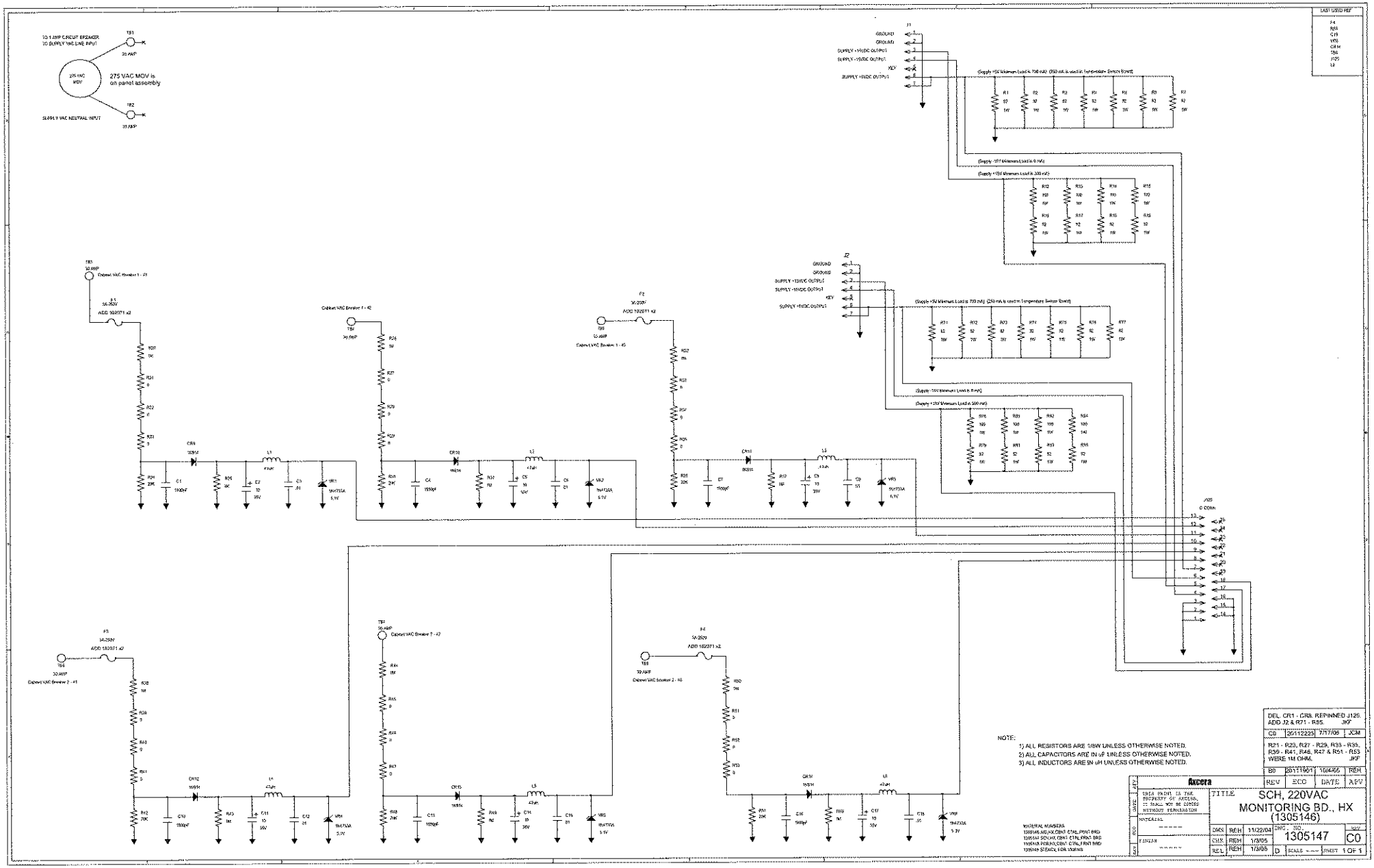
10:1 AMP CIRCUIT BREAKER TO SUPPLY VAC LINE INPUT
275 VAC MOV is on panel assembly
SUPPLY VAC NEUTRAL INPUT
J1
J2
J125
NOTE:
1) ALL RESISTORS ARE 1/8W UNLESS OTHERWISE NOTED.
2) ALL CAPACITORS ARE IN uF UNLESS OTHERWISE NOTED.
3) ALL INDUCTORS ARE IN uH UNLESS OTHERWISE NOTED.
DEL. CR1 - CR8. REPINNED J125. ADD J2 & R71 - R85. JKP
R21 - R23, R27 - R29, R33 - R35, R39 - R41, R46, R47 & R51 - R53 WERE 1M OHM. JKP
Axcera
SCH, 220VAC MONITORING BD., HX (1305146)
1305147
C0
1 OF 1

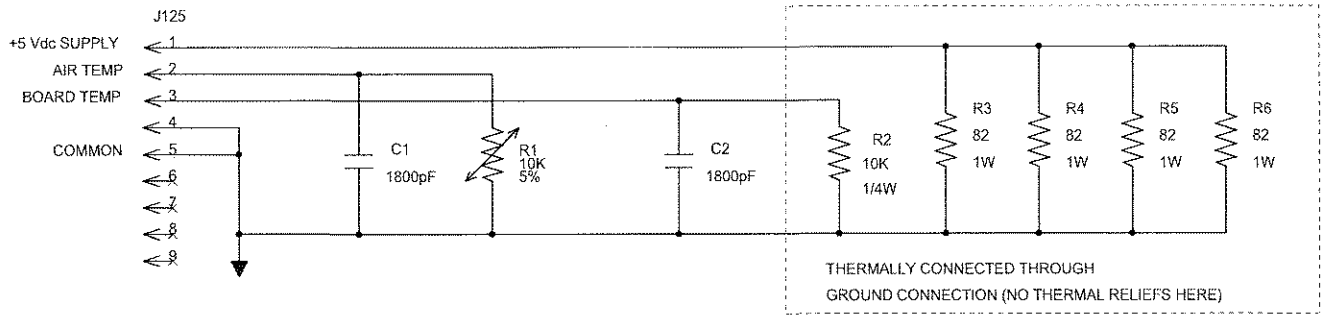

MATERIAL NUMBERS:
1305303 A/D,HX,CBNT CTRL,TEMP BRD
1305304 SCH,HX,CBNT CTRL,TEMP BRD
1305305 PCB,HX,CBNT CTRL,TEMP BRD

REV	ECO	DATE	APV
	R1 WAS 1300189. CHANGED R2 TO A FIXED RESISTOR.		CR
C0	20112389	5/15/07	REH
	SWAPPED CONNECTIONS TO J125 PINS 2 AND 3.		(CR)
B0	20111710	10/07/05	REH

Axcera

THIS PRINT IS THE PROPERTY OF AXCERA, IT SHALL NOT BE COPIED WITHOUT PERMISSION

MATERIAL
- - - - -

FINISH
- - - - -

TITLE SCH, TEMP SENSOR BD., HX, CABINET CTRL (1305303)

DWN	REH	11/23/04	DWG. NO. 1305304	REV C0
CHK	REH	12/22/04		
REL	REH	12/22/04	B SCALE - - -	SHEET 1 OF 1

NOTE:

1) ALL RESISTORS ARE 1/8W UNLESS OTHERWISE NOTED.
2) ALL CAPACITORS ARE IN uF UNLESS OTHERWISE NOTED.
3) ALL INDUCTORS ARE IN uH UNLESS OTHERWISE NOTED.

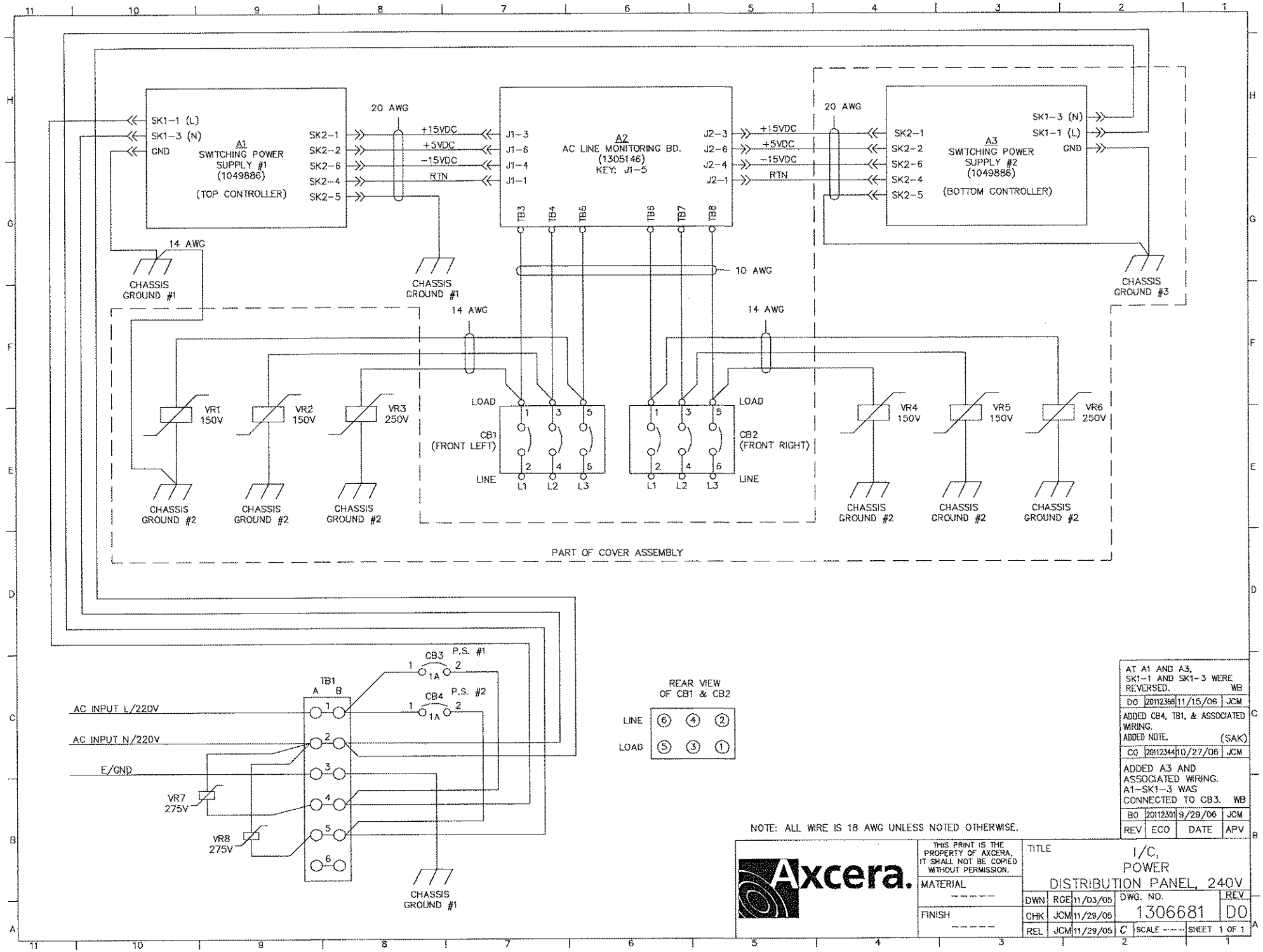

NOTE: ALL WIRE IS 18 AWG UNLESS NOTED OTHERWISE.

REV	ECO	DATE	APV
AT A1 AND A3, SK1-1 AND SK1-3 WERE REVERSED. WB			
D0	20112366	11/15/06	JCM
ADDED CB4, TB1, & ASSOCIATED WIRING. ADDED NOTE. (SAK)			
C0	20112344	10/27/06	JCM
ADDED A3 AND ASSOCIATED WIRING. A1-SK1-3 WAS CONNECTED TO CB3. WB			
B0	20112301	9/29/06	JCM

Axcera.

THIS PRINT IS THE PROPERTY OF AXCERA. IT SHALL NOT BE COPIED WITHOUT PERMISSION.

MATERIAL ------

FINISH ------

TITLE I/C, POWER DISTRIBUTION PANEL, 240V

DWN	RGE	11/03/05	DWG. NO. 1306681	REV D0
CHK	JCM	11/29/05		
REL	JCM	11/29/05	C SCALE ------	SHEET 1 OF 1

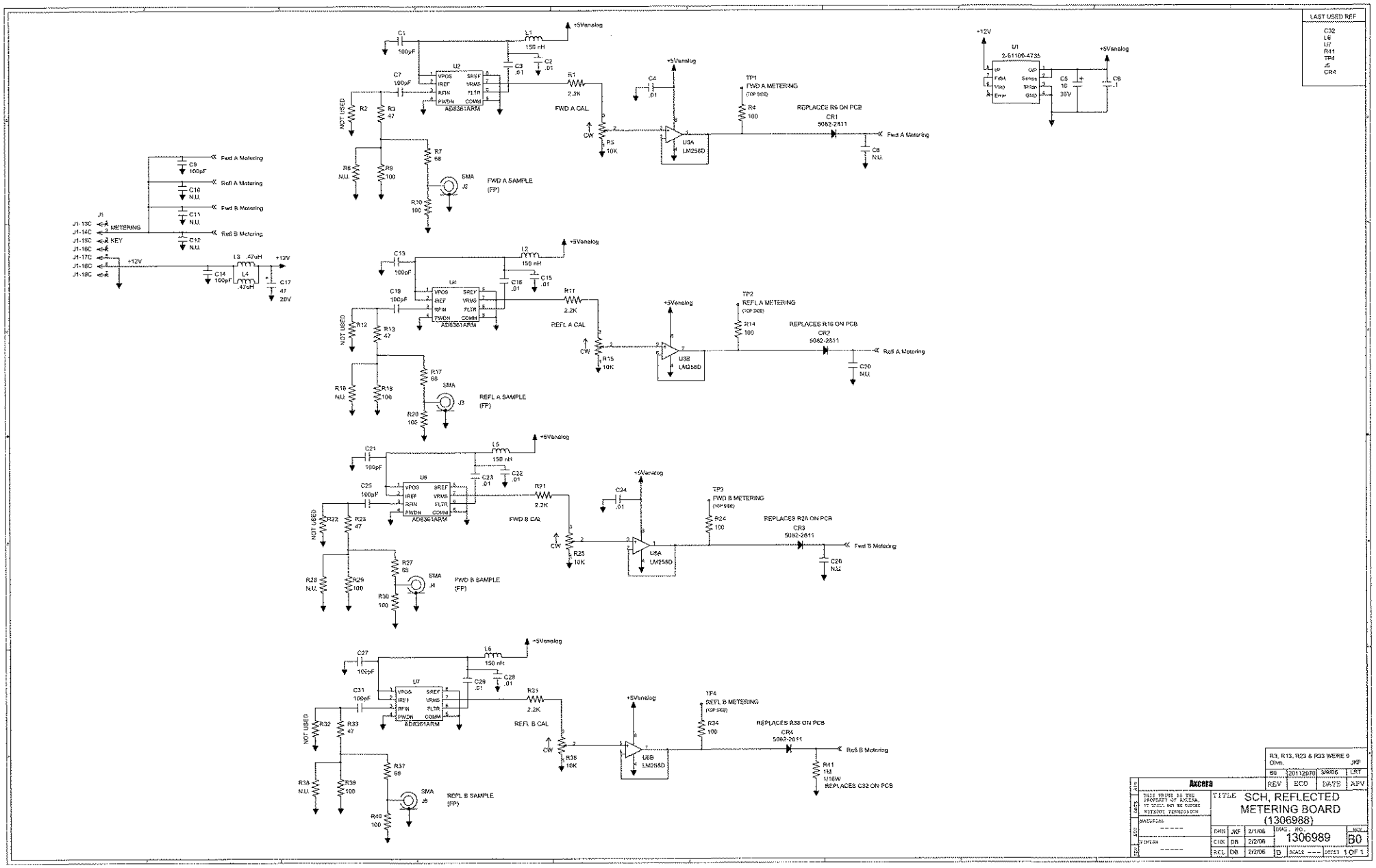
LAST USED REF
C32
L6
U7
R41
TP4
J5
CR4
+5Vanalog
+12V
U1
2-61100-4735
C5
10
35V
C6
.1
C1
100pF
L1
150 nH
C2
.01
C3
.01
U2
AD8361ARM
VPOS
SREF
IREF
VRMS
RFIN
FLTR
PWDN
COMM
C7
100pF
R1
2.2K
FWD A CAL.
R2
R3
47
NOT USED
R6
N.U.
R9
100
R7
68
R10
100
SMA
J2
FWD A SAMPLE
(FP)
C4
.01
TP1
FWD A METERING
(TOP SIDE)
R4
100
REPLACES R5 ON PCB
CR1
5082-2811
Fwd A Metering
C8
N.U.
CW
R5
10K
U3A
LM258D
C9
100pF
Refl A Metering
C10
N.U.
Fwd B Metering
C11
N.U.
Refl B Metering
C12
N.U.
J1
METERING
KEY
J1-13C
J1-14C
J1-15C
J1-16C
J1-17C
J1-18C
J1-19C
C14
100pF
L3
.47uH
L4
.47uH
C17
47
20V
C13
100pF
L2
150 nH
C16
.01
C15
.01
U4
C19
100pF
R11
2.2K
REFL A CAL
R12
R13
47
R16
N.U.
R18
100
R17
68
R20
100
SMA
J3
REFL A SAMPLE
(FP)
TP2
REFL A METERING
(TOP SIDE)
R14
100
REPLACES R16 ON PCB
CR2
5082-2811
C20
N.U.
U3B
LM258D
C21
100pF
L5
150 nH
C23
.01
C22
.01
U6
C25
100pF
R21
2.2K
FWD B CAL
R22
R23
47
R28
N.U.
R29
100
R27
68
R30
100
SMA
J4
FWD B SAMPLE
(FP)
C24
.01
TP3
FWD B METERING
(TOP SIDE)
R24
100
REPLACES R26 ON PCB
CR3
5082-2811
C26
N.U.
U5A
LM258D
C27
100pF
L6
150 nH
C29
.01
C28
.01
U7
C31
100pF
R31
2.2K
REFL B CAL
R32
R33
47
R38
N.U.
R39
100
R37
68
R40
100
SMA
J5
REFL B SAMPLE
(FP)
TP4
REFL B METERING
(TOP SIDE)
R34
100
REPLACES R35 ON PCB
CR4
5082-2811
Refl B Metering
R41
1M
1/16W
REPLACES C32 ON PCB
U5B
LM258D
R3, R13, R23 & R33 WERE 9 Ohm.
JKF
Axcera
SCH, REFLECTED METERING BOARD (1306988)
DWG. NO. 1306989
B0
SCALE ---
SHEET 1 OF 1

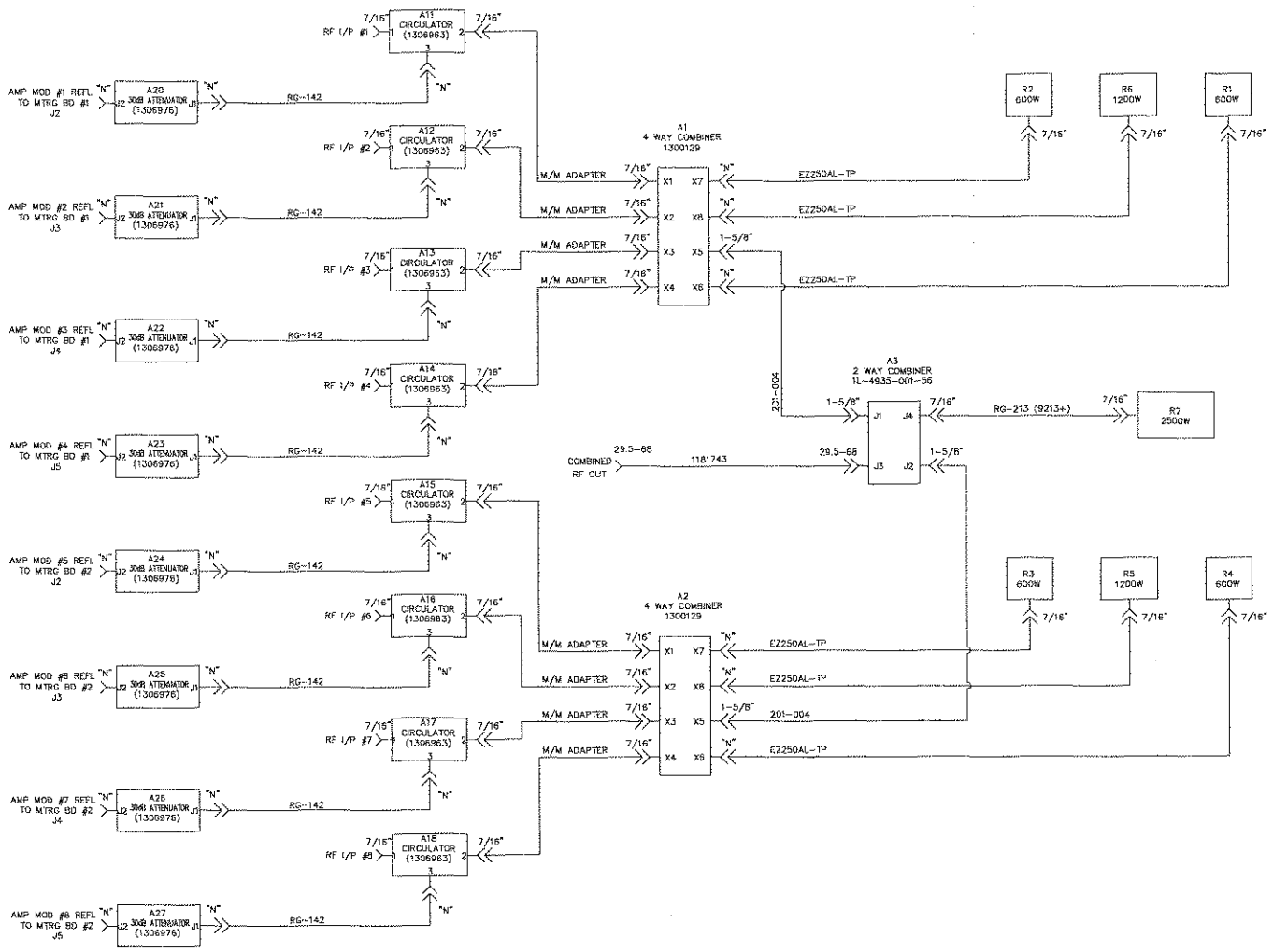

REV	ECO	DATE	APV
B0	201/2500	3/27/07	JCC

1300129 WAS 51-5361-582-00 BOTH PLACES (JEC)

Axcera

THIS PRINT IS THE PROPERTY OF AXCERA, IT SHALL NOT BE COPIED WITHOUT PERMISSION.

MATERIAL ----

FINISH ----

TITLE 1/C, 8 WAY UHF COMBINER, W/CIRCULATORS, INNOV. CH. 14-26

DWN	SAK	2/10/06
CHK	JCM	2/27/06
REL	JCM	2/27/06

DWG. NO. 1307020 REV. B0

D SCALE ---- SHEET 1 OF 1

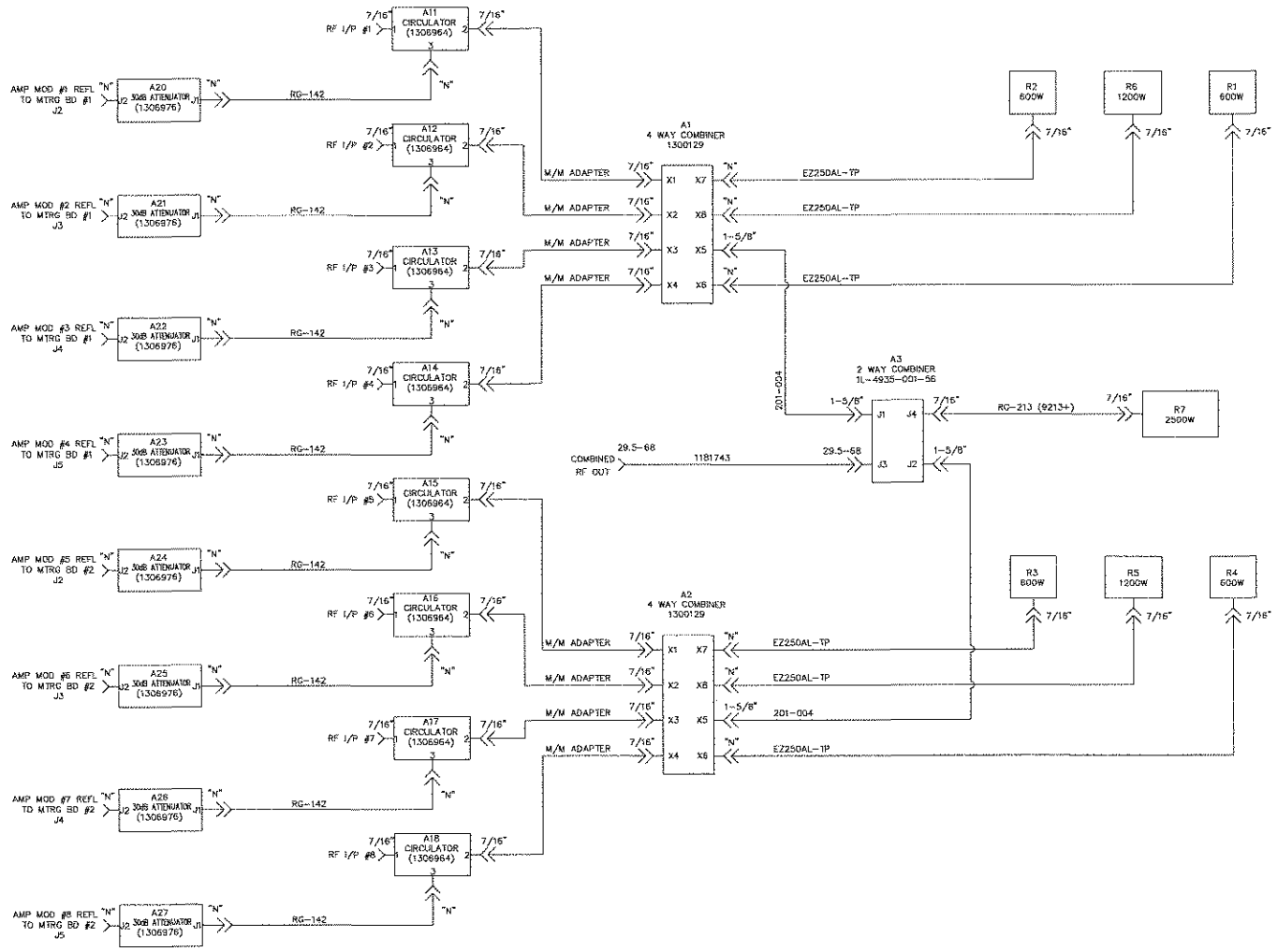

REV	ECO	DATE	APV
B0	2001250M	3/27/07	JEC

1300129 WAS 59-6391-002-00 BOTH PLACES (JEC)

Axcera.

THIS PRINT IS THE PROPERTY OF AXCERA, IT SHALL NOT BE COPIED WITHOUT PERMISSION.

MATERIAL

FINISH

TITLE I/C, 8 WAY UHF COMBINER, W/CIRCULATORS, INNOV. CH. 26-44

DWN	SAK	2/27/06	DWG. NO. 1307066
CHK	LRT	3/14/07	REV B0
REL	LRT	3/14/07	D SCALE --- SHEET 1 OF 1

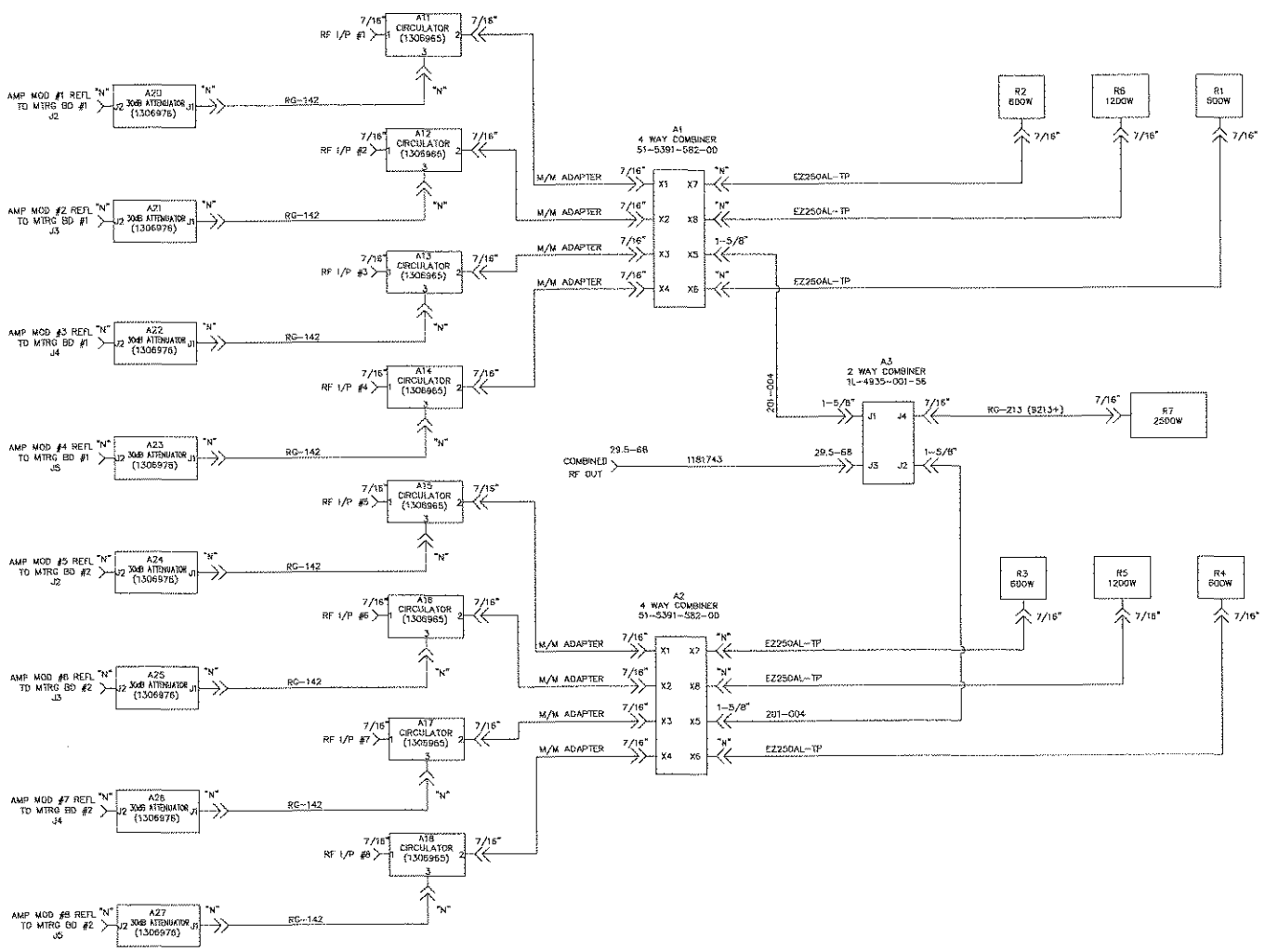

REV	ECO	DATE	APV

Axcera.

THIS PRINT IS THE PROPERTY OF AXCERA. IT SHALL NOT BE COPIED WITHOUT PERMISSION.

MATERIAL ——

FINISH ——

TITLE I/C, 8 WAY UHF COMBINER, W/CIRCULATORS, INNOV. CH. 44-69

DWN	SAK	2/27/06	DWG. NO. 1307067	REV A0
CHK	LRT	12/18/06		
REL	LRT	12/18/06	D SCALE ----	SHEET 1 OF 1

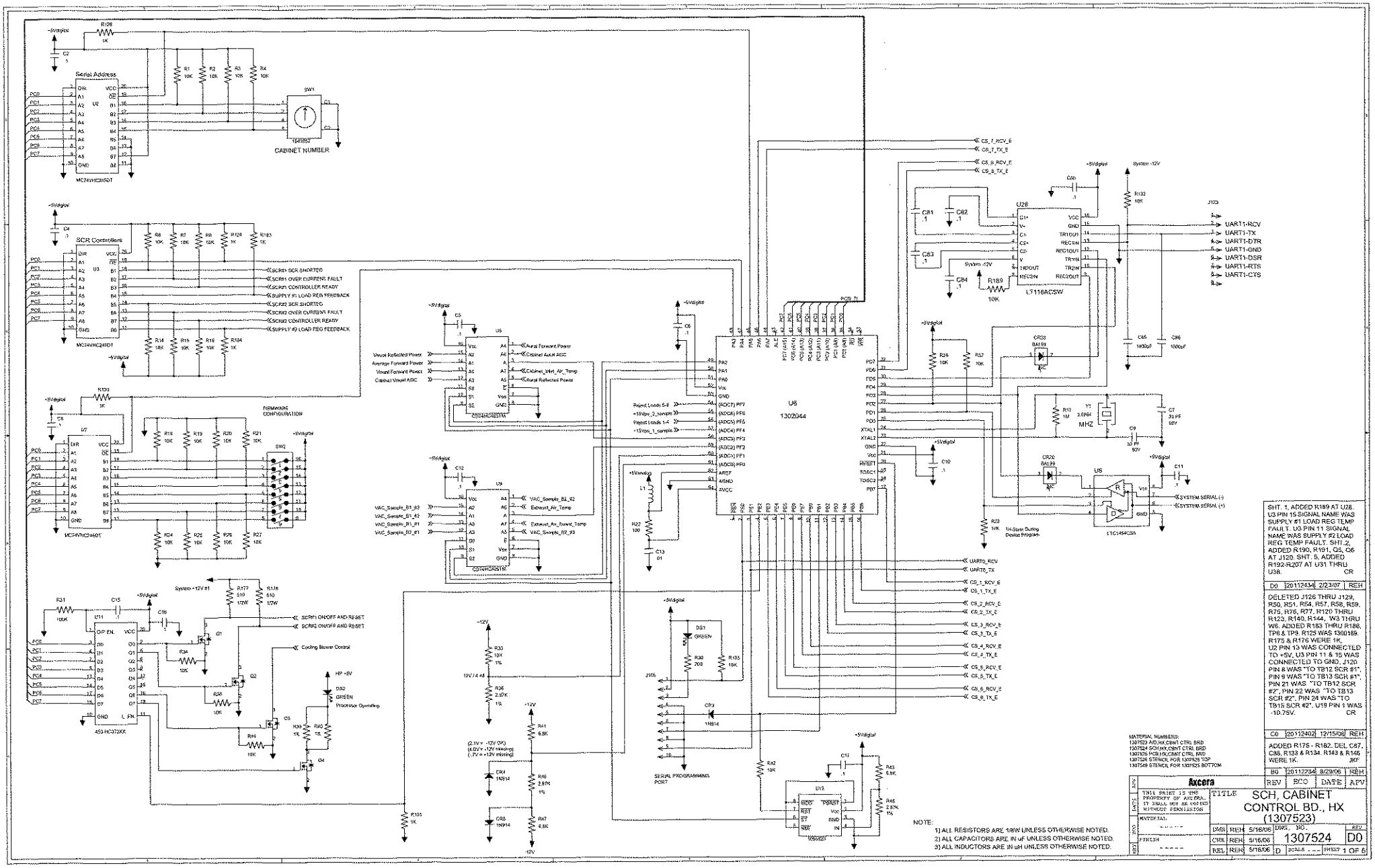
Serial Address
CABINET NUMBER
SCR Controllers
MC74VHC245DT
MC74VHC240DT
MC74VHC244DT
CD74HC4051M
CD74HC245TM
FIRMWARE CONFIGURATION
U6
1302044
L7116ACSW
ST3C1454CSA
MHZ
UART1-RCV
UART1-TX
UART1-DTR
UART1-GND
UART1-DSR
UART1-RTS
UART1-CTS
SYSTEM SERIAL (-)
SYSTEM SERIAL (+)
Cooling Blower Control
SERIAL PROGRAMMING PORT
NOTE:
1) ALL RESISTORS ARE 1/8W UNLESS OTHERWISE NOTED.
2) ALL CAPACITORS ARE IN uF UNLESS OTHERWISE NOTED.
3) ALL INDUCTORS ARE IN uH UNLESS OTHERWISE NOTED.
SHT. 1, ADDED R189 AT U28. U3 PIN 15 SIGNAL NAME WAS SUPPLY #1 LOAD REG TEMP FAULT. U3 PIN 11 SIGNAL NAME WAS SUPPLY #2 LOAD REG TEMP FAULT. SHT.2, ADDED R190, R191, Q5, Q6 AT J120. SHT. 5, ADDED R192-R207 AT U31 THRU U38. CR
D0 20112434 2/23/07 REH
DELETED J126 THRU J129, R50, R51, R54, R57, R58, R59, R76, R78, R77, R120 THRU R123, R140, R144, W3 THRU W6. ADDED R183 THRU R188, TP8 & TP9. R125 WAS 1300189. R175 & R176 WERE 1K. U2 PIN 13 WAS CONNECTED TO +5V, U3 PIN 11 & 15 WAS CONNECTED TO GND. J120 PIN 8 WAS TO TB12 SCR #1, PIN 9 WAS TO TB13 SCR #1, PIN 21 WAS TO TB12 SCR #2, PIN 22 WAS TO TB13 SCR #2, PIN 24 WAS TO TB15 SCR #2, U19 PIN 1 WAS -10.75V. CR
C0 20112402 12/15/06 REH
ADDED R175 - R182. DEL C87, C88, R133 & R134. R143 & R145 WERE 1K. JKF
B0 20112334 8/29/06 1 REH
MATERIAL NUMBERS:
1307523 A/D,HX,CBNT CTRL BRD
1307524 SCR,HX,CBNT CTRL BRD
1307525 PCB HX,CBNT CTRL BRD
1307526 STENCIL FOR 1307525 TOP
1307549 STENCIL FOR 1307525 BOTTOM
Kyocera
REV SCO DATE APV
TITLE SCH, CABINET CONTROL BD., HX (1307523)
DWN REH 5/16/06
CHK REH 5/16/06
REL REH 5/16/06
DWG. NO. 1307524
REV D0
SCALE ---
SHEET 1 OF 5

EXHAUST AIR TEMP SENSOR BOARD INTERFACES / POWER SUPPLY INTERFACES

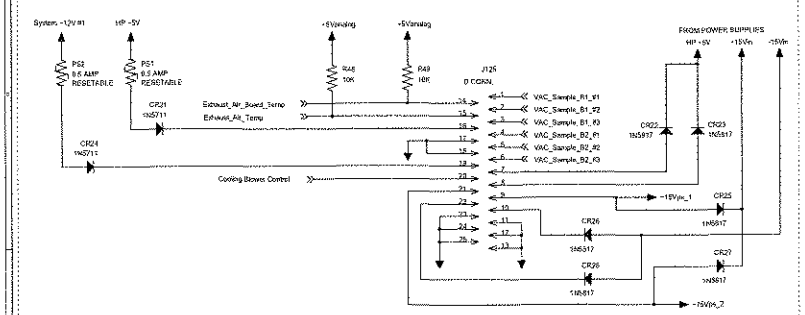

POWER SUPPLY SCR CONTROLLER INTERFACES

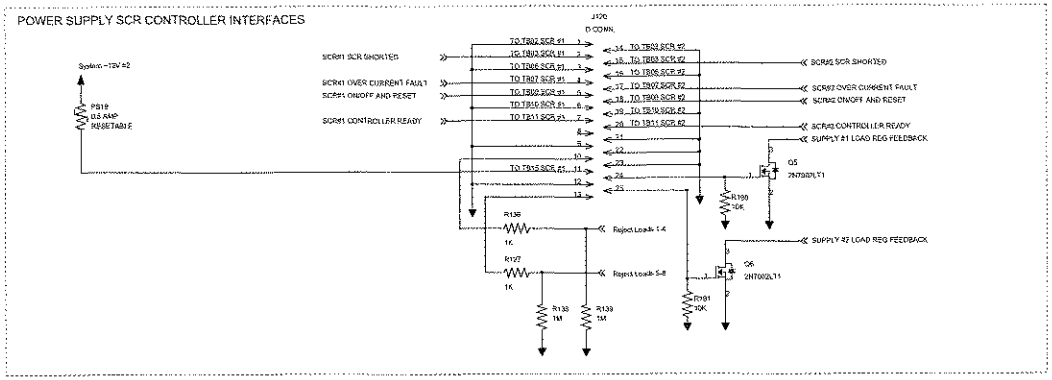

AMPLIFIER MODULE INTERCONNECTS FOR POSITIONS 1, 2, 3, 4

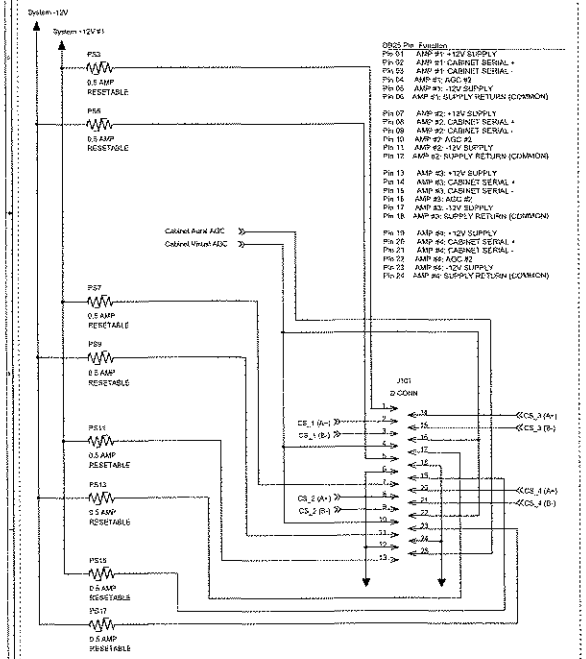

AMPLIFIER MODULE INTERCONNECTS FOR POSITIONS 5, 6, 7, 8

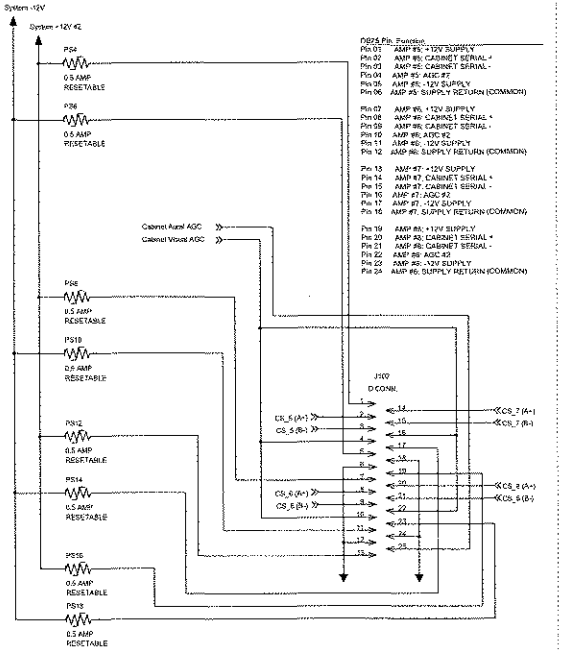

RJ45 INTERFACES

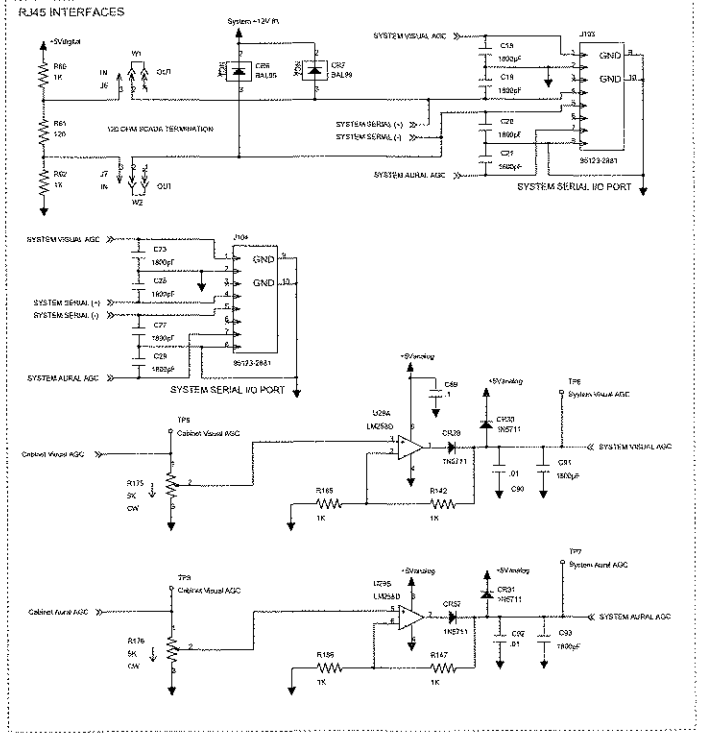

Axcera	REV	ECO	DATE	APV	TITLE SCH, CABINET CONTROL BD., HX (1307523)
THIS PRINT IS THE PROPERTY OF AXCERA. IT SHALL NOT BE COPIED WITHOUT PERMISSION					
MATERIAL ~ - - - -	DWG	REH	5/16/06	DWG. NO. 1307524	REV D0
FINISH ~ - - - -	CHK	REH	5/16/06		
	REL	REH	5/16/06	D SCALE - - - -	SHEET 2 OF 5

CABINET INLET AIR TEMPERATURE SENSOR

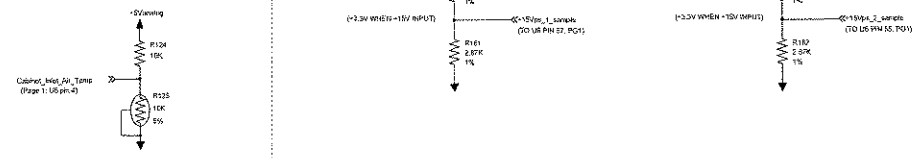

ON-BOARD VOLTAGE REGULATORS

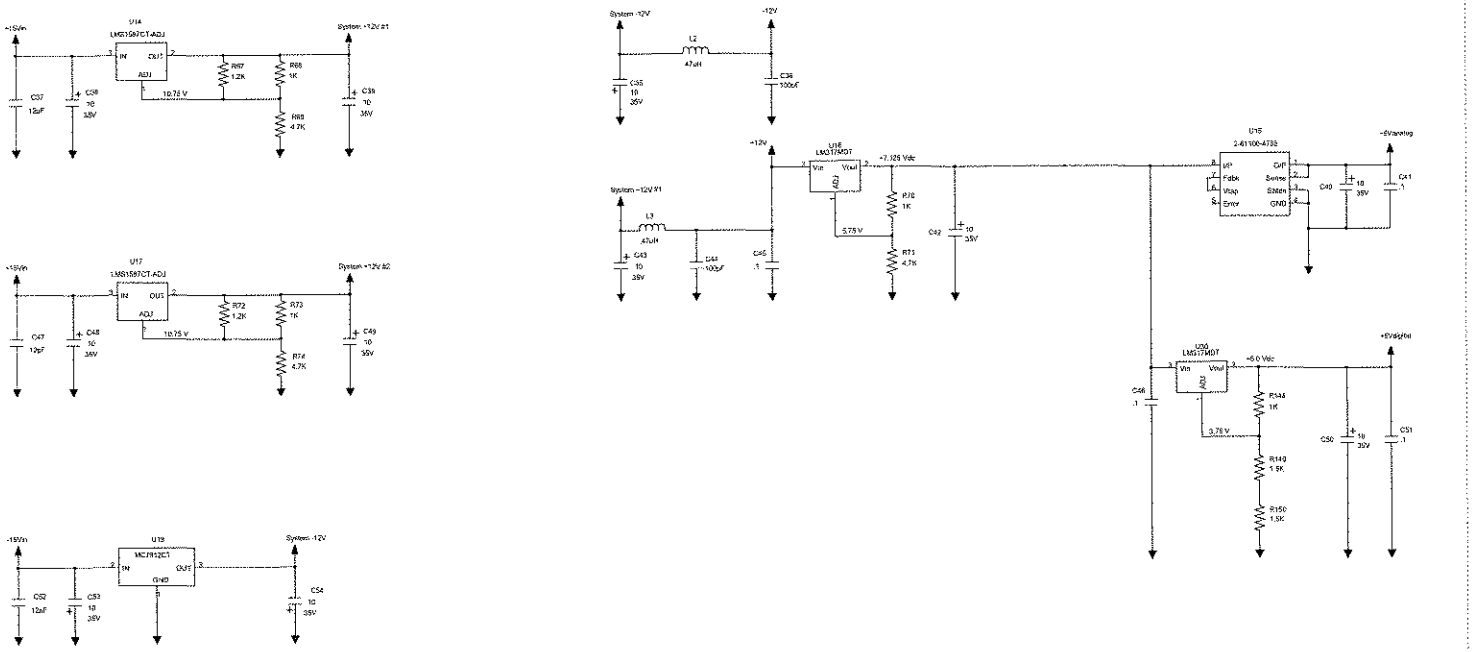

Axcera		REV	ECO	DATE	APV
THIS PRINT IS THE PROPERTY OF AXCERA. IT SHALL NOT BE COPIED WITHOUT PERMISSION	TITLE	SCH, CABINET CONTROL BD., HX (1307523)			
MATERIAL ------	DRN REH 5/16/06	DWG. NO. 1307524			REV D0
FINISH ------	CHK REH 5/16/06				
	REL REH 5/16/06	D	SCALE ------	SHEET 3 OF 5	

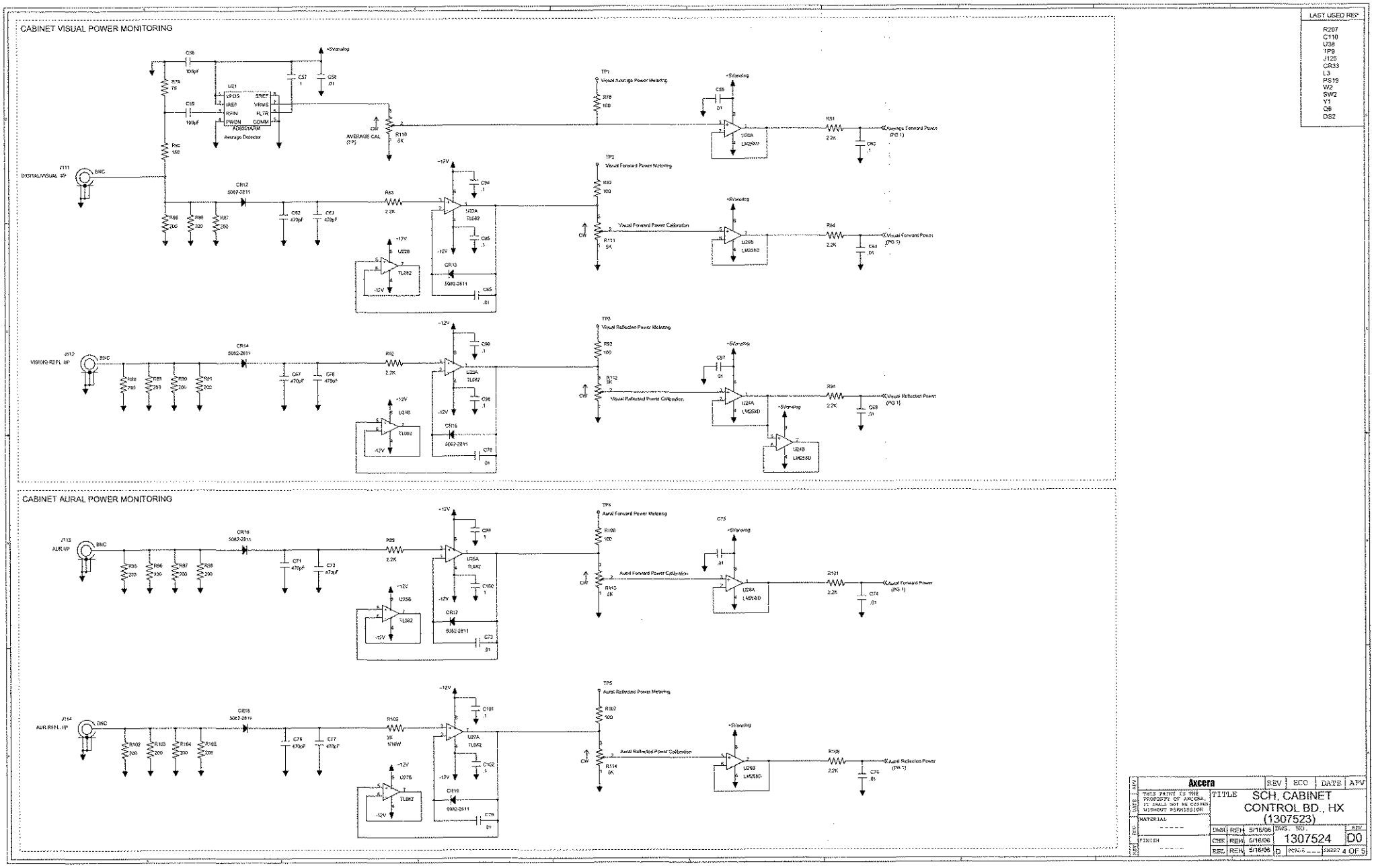
CABINET VISUAL POWER MONITORING
CABINET AURAL POWER MONITORING
LAST USED REF
R207
C110
U38
TP9
J125
CR33
L3
PS19
W2
SW2
Y1
Q6
DS2
Visual Average Power Metering
Visual Forward Power Metering
Visual Forward Power Calibration
Visual Reflected Power Metering
Visual Reflected Power Calibration
Aural Forward Power Metering
Aural Forward Power Calibration
Aural Reflected Power Metering
Aural Reflected Power Calibration
Average Detector
AD8351ARM
DIGITAL/VISUAL FP
VISUAL REFL FP
AUR FP
AUR REFL FP
Axcera
TITLE
SCH, CABINET CONTROL BD., HX (1307523)
DWG. NO.
1307524
REV
D0
SHEET 4 OF 5

AMPLIFIER SERIAL COMMUNICATION PORTS

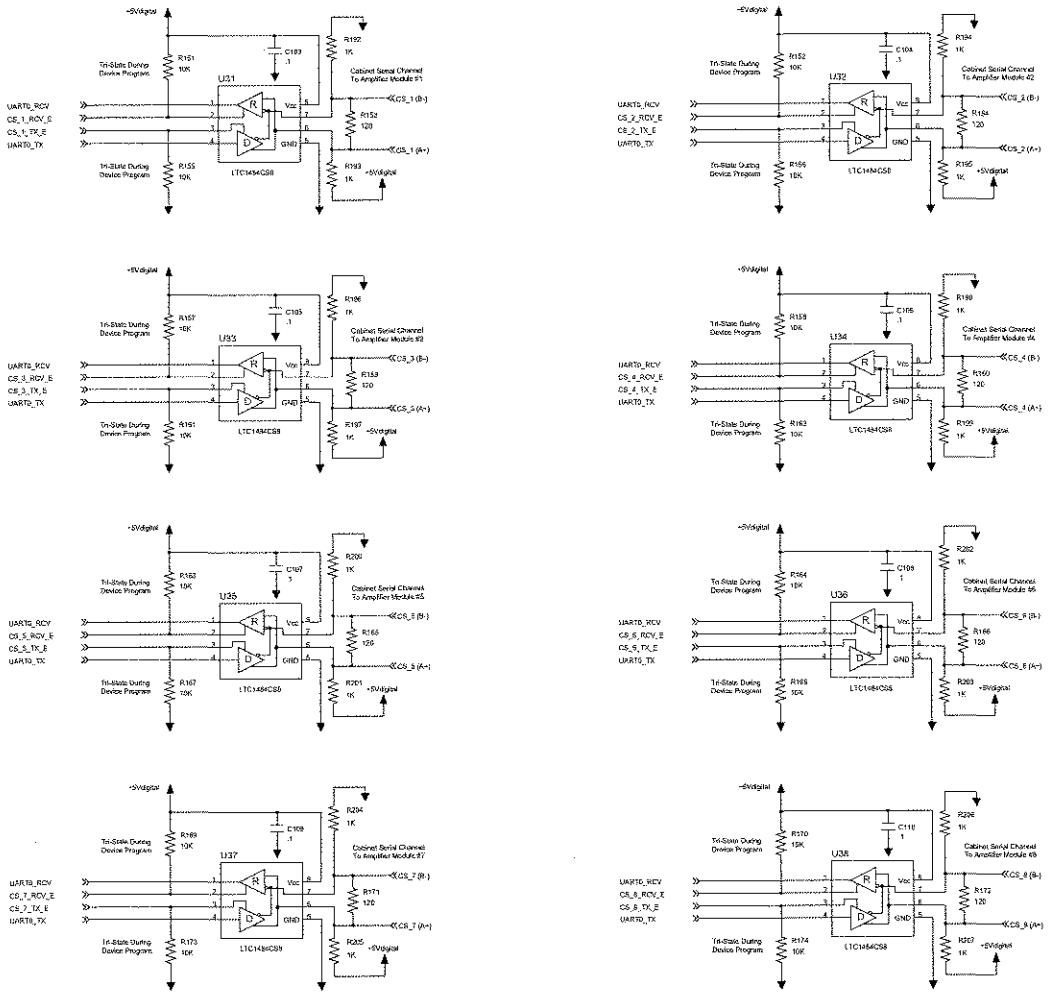

Circuit Description

Page 1:

Centered in page one is the microcontroller. This in-circuit programmable Atmel microcontroller is operated at 3.6864 MHz. Programming of this device is performed through J105. PF2 and PF3 are analog inputs connected to multiplexers U5 and U9. Desired multiplexer analog channels are selected by the setting of PA0, PA1, & PA2. PF0 and PF1 are used to monitor the +12V and -12V supplies to the board.

U12 is a watchdog IC used to hold the microcontroller in reset if the supply voltage is less than 4.21 Vdc: (1.25 Vdc < Pin 4 (IN) < Pin 2 (Vcc)). U12 momentarily resets the microcontroller if Pin 6 is not clocked every second.

Microcontroller UART 0 is used to communicate with each of the amplifier modules. Page 5 contains individual RS-485 transceiver ICs for serial communication. The RS-485 transceiver ICs contain components that maintain the receive channel in a high output state when the inputs are left open, shorted together, or terminated with no signal. Select microcontroller bits of ports A, B, E, and D are used to individually enable receiver channels and transmit channels.

Microcontroller UART 1 is used to communicate with the transmitter's exciter or exciter switcher. U8 is a RS-485 transceiver IC and U28 is a RS-232 serial port. J120 is used to provide RS-232 access to the controller. A standard NULL modem cable is needed to connect to a PC. Since data input from either an exciter or a remote PC are diode ORed, write operations to J120 must monitor the data I/O of the exciter.

Upper left corner U1 is used to determine where the amplifier control board is located. Rotary switch SW1 determines the cabinet number and thus the cabinet's serial address. The upper three bits of U1 can be used to determine pyhsical board characteristics. Bit 6 will be reserved for a half cabinet controller to determine if the controller is the top half controller or the bottom half controller.

U3 below U1 is used to monitor the status of the SCR controllers. U7 is connected to an 8 position DIP switch which can be used to enable select firmware options.

U11 is used to control the SRC controller, the cabinet's cooling blower FET, and the processor operating LED. The use of this IC allows these circuits to remain stable during a microcontroller reset.

Page 2:

In the upper left section of page 2 are circuits that interface with the exhaust air temperature board and the low power supply. A diode is provided in the +12V output line to allow multiple cabinets to be connected to the coil of the external blower relay. An external cooling blower can be powered when any of the cabinets energize the external blower relay by pulling low the Cooling Blower Control line that is connected to the low side of the coil.
Voltage samples of the cabinet's high power AC inputs are monitored through inputs of J125. Diodes on the low power supply lines allow for the use of redundant cabinet power supplies where needed.

The Power Supply SCR Controller interface section routes signals need to control the high power supply. In systems where the power supply voltage feedback potentiometers are located within the power supply assembly, jumper Wx and Wx need to be set for "Remote". When Wx and Wx are set for "On Board", R120, R121, R122, and R123 are used to set the output voltage of the high power supply.

Amplifier module interfaces are routed through J101 and J102. Each amplifier module has independent RS-485 transceivers and power sources that are current limitted with self-resetting fuses.

The RS485 interface section defines the RS-485 loop through connections that also contain the System Visual AGC and System Aural AGC signals. Circuitry in the lower portion of this block are used to convert cabinet AGC voltages into system AGC voltages. If the cabinet level voltages are greater that than the system levels, U13 increases its output to drive the system level to match the cabinet level. Cabinet AGC levels are set by the highest AGC voltage of the install amplifier modules.

Page 3:

R125 is used to measure the cabinet's inlet air temperature. Also defined on this page are the boards voltage regulators. The cabinet's +/-15V supply is used to generate +/-12V for all amplifier modules. The +12V signal is further regulated to +7 Vdc then regulated to seperate digital +5V and analog +5V. The digital +5V regulator is not as precise as the analog +5V regulator but it is capable of high current loads.

Page 4:

The RF detection circuits are feed into seperate dual stage op-amps to allow for op-amp locations that are kept close to the detectors. Once the detected voltage is amplified, most signals are feed through gain potentiometers before the signals are feed through unity gain amplifiers.

Page 5:

This page contains individual RS-485 transceiver ICs for serial communication with the amplifier modules. The RS-485 transceiver ICs contain components that maintain the receive channel in a high output state when the inputs are left open, shorted together, or terminated with no signal. The transmit and receive channels of each transciever are individually controlled by the microcontroller. During reset or programming of the microcontroller, pull-up and pull-down resistors are used to place the transceivers in a tri-state condition. Each amplifier RS-485 connection is terminated with a 120 ohm resistor.

Axcera		REV	ECO	DATE	APV
THIS PRINT IS THE PROPERTY OF AXCERA, IT SHALL NOT BE COPIED WITHOUT PERMISSION	TITLE	SCH, CABINET CONTROL BD., HX (1307523)			
MATERIAL -----	DWN REH 5/16/06	DWG NO. 1307524		REV D0	
FINISH -----	CHK REH 5/16/06				
	REL REH 5/16/06	D	SCALE ----	SHEET 5 OF 5	

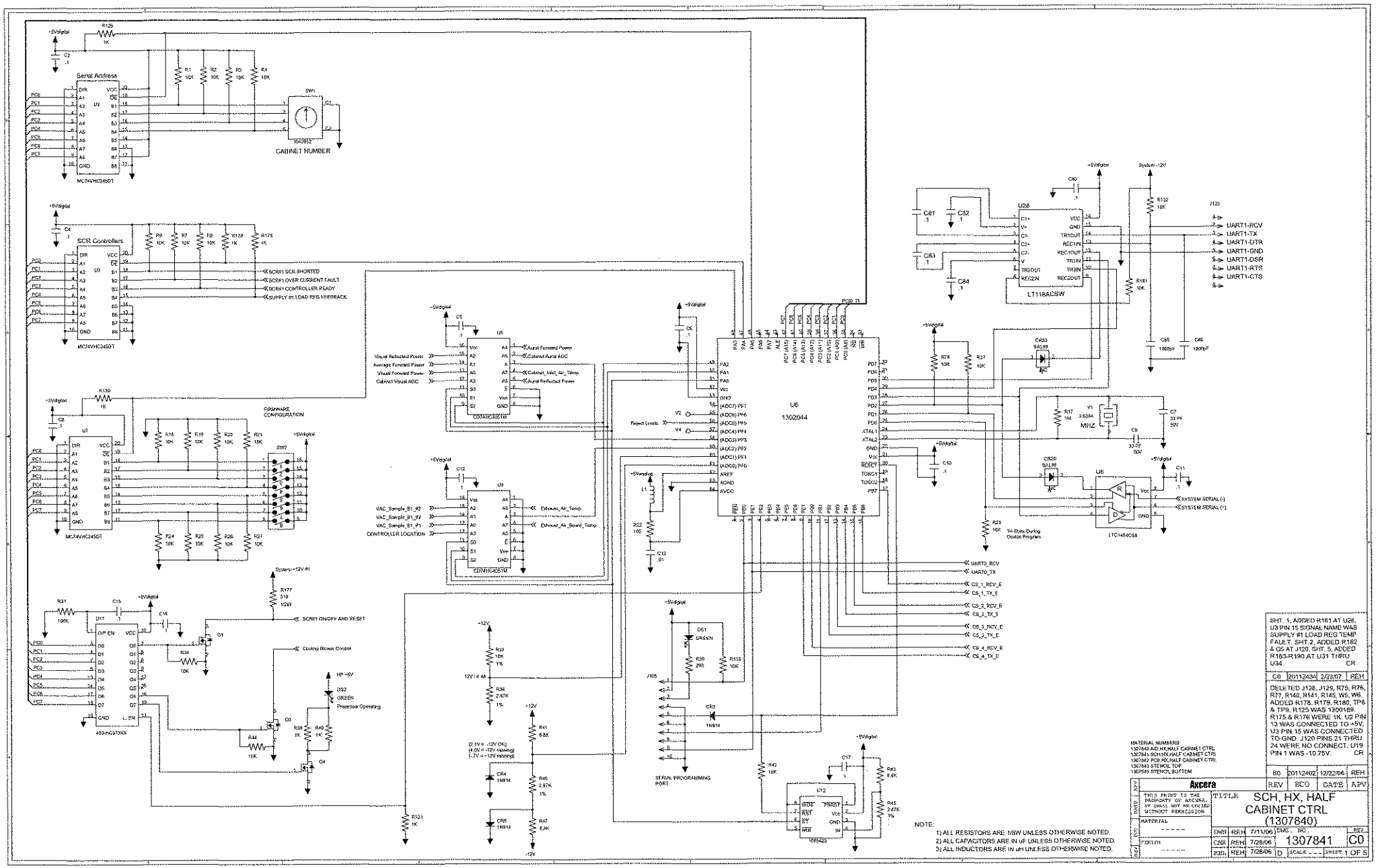
Serial Address
CABINET NUMBER
SCR Controllers
SCR#1 SCR SHORTED
SCR#1 OVER CURRENT FAULT
SCR#1 CONTROLLER READY
SUPPLY #1 LOAD REG FEEDBACK
FIRMWARE CONFIGURATION
SCR#1 ON/OFF AND RESET
Cooling Blower Control
Processor Operating
SERIAL PROGRAMMING PORT
UART1-RCV
UART1-TX
UART1-DTR
UART1-GND
UART1-DSR
UART1-RTS
UART1-CTS
SYSTEM SERIAL (+)
SYSTEM SERIAL (-)
Tri-State During Device Program
MHZ
LT118ACSW
LTC1484CS8
MC74VHC245DT
CD74HC4051M
ASS-HC373XX
NOTE:
1) ALL RESISTORS ARE 1/8W UNLESS OTHERWISE NOTED.
2) ALL CAPACITORS ARE IN uF UNLESS OTHERWISE NOTED.
3) ALL INDUCTORS ARE IN uH UNLESS OTHERWISE NOTED.
SHT. 1, ADDED R181 AT U28. U3 PIN 15 SIGNAL NAMD WAS SUPPLY #1 LOAD REG TEMP FAULT. SHT. 2, ADDED R182 & Q5 AT J120. SHT. 5, ADDED R163-R190 AT U31 THRU U34. CR
C0 20112434 2/23/07 REH
DELETED J128, J129, R75, R76, R77, R140, R141, R145, W5, W6. ADDED R178, R179, R180, TP8 & TP9. R125 WAS 1300169. R175 & R176 WERE 1K. U2 PIN 13 WAS CONNECTED TO +5V. U3 PIN 15 WAS CONNECTED TO GND. J120 PINS 21 THRU 24 WERE NO CONNECT. U19 PIN 1 WAS -10.75V. CR
B0 20112402 12/22/06 REH
Axcera
REV ECO DATE APV
THIS PRINT IS THE PROPERTY OF AXCERA, IT CANNOT NOT BE COPIED WITHOUT PERMISSION
MATERIAL
FINISH
TITLE SCH, HX, HALF CABINET CTRL (1307840)
DWN REH 7/11/06
CHK REH 7/28/06
ENG REH 7/28/06
DWG. NO. 1307841
REV C0
D
SCALE
SHEET 1 OF 5

EXHAUST AIR TEMP SENSOR BOARD INTERFACES / POWER SUPPLY INTERFACES

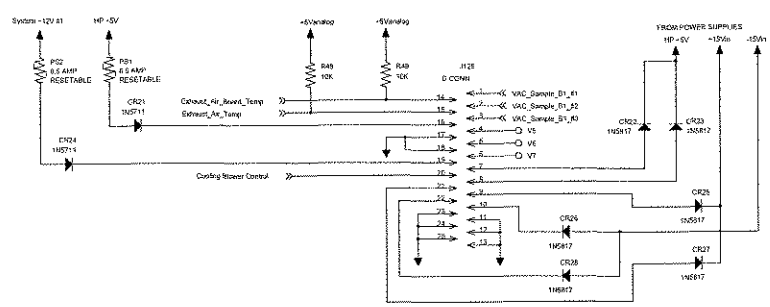

POWER SUPPLY SCR CONTROLLER INTERFACES

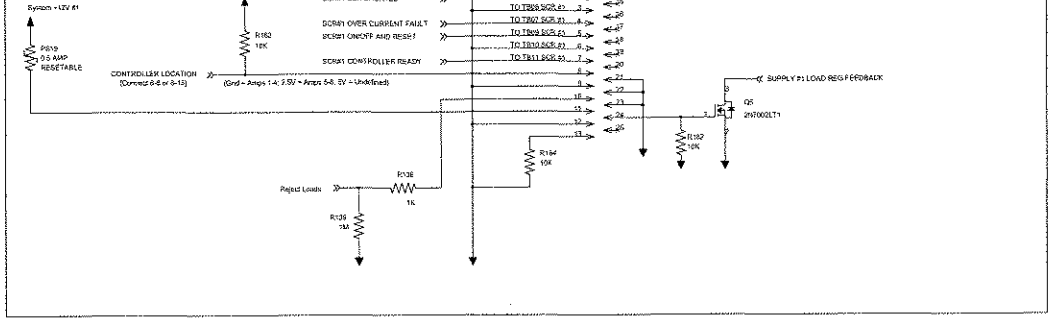

AMPLIFIER MODULE INTERCONNECTS FOR POSITIONS 1, 2, 3, 4 OR 5, 6, 7, 8.

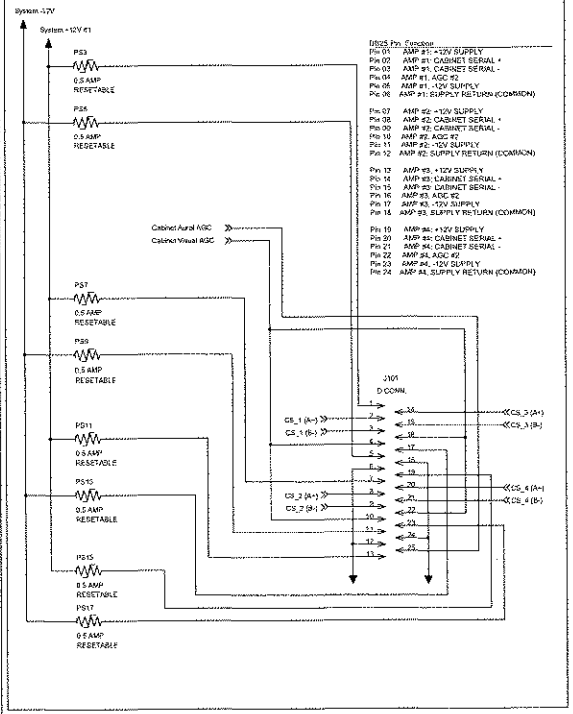

DB25 Pin Function

Pin 01	AMP #1: +12V SUPPLY
Pin 02	AMP #1: CABINET SERIAL +
Pin 03	AMP #1: CABINET SERIAL -
Pin 04	AMP #1: AGC #2
Pin 05	AMP #1: -12V SUPPLY
Pin 06	AMP #1: SUPPLY RETURN (COMMON)
Pin 07	AMP #2: +12V SUPPLY
Pin 08	AMP #2: CABINET SERIAL +
Pin 09	AMP #2: CABINET SERIAL -
Pin 10	AMP #2: AGC #2
Pin 11	AMP #2: -12V SUPPLY
Pin 12	AMP #2: SUPPLY RETURN (COMMON)
Pin 13	AMP #3: +12V SUPPLY
Pin 14	AMP #3: CABINET SERIAL +
Pin 15	AMP #3: CABINET SERIAL -
Pin 16	AMP #3: AGC #2
Pin 17	AMP #3: -12V SUPPLY
Pin 18	AMP #3: SUPPLY RETURN (COMMON)
Pin 19	AMP #4: +12V SUPPLY
Pin 20	AMP #4: CABINET SERIAL +
Pin 21	AMP #4: CABINET SERIAL -
Pin 22	AMP #4: AGC #2
Pin 23	AMP #4: -12V SUPPLY
Pin 24	AMP #4: SUPPLY RETURN (COMMON)

RJ45 INTERFACES

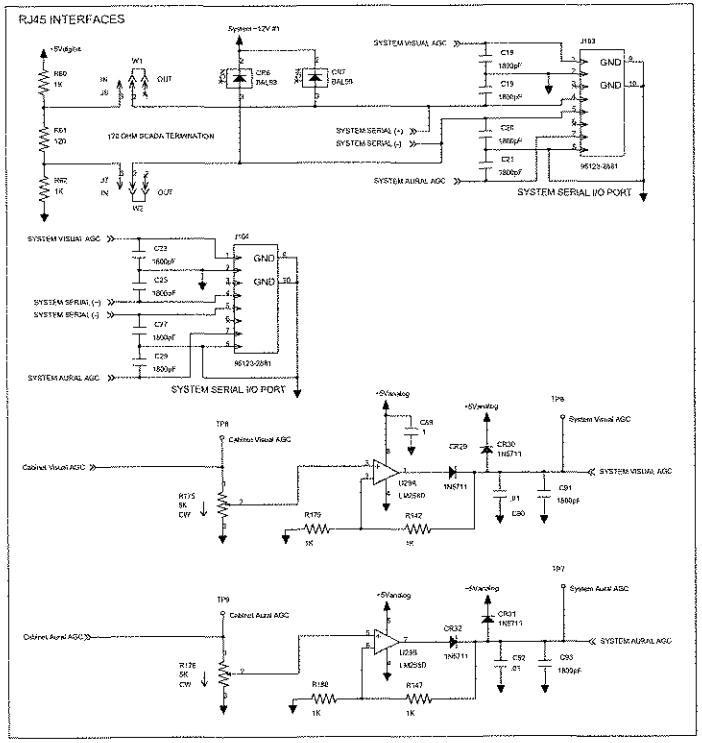

Axcera		REV	ECO	DATE	APV
THIS PRINT IS THE PROPERTY OF AXCERA IT SHALL NOT BE COPIED WITHOUT PERMISSION	TITLE	SCH, HX, HALF CABINET CTRL (1307840)			
MATERIAL ----	DWN REH 7/11/06	DWG. NO. 1307841		REV C0	
FINISH ----	CHK REH 7/28/06				
	REL REH 7/28/06	D	SCALE ----	SHEET 2 OF 5	

CABINET INLET AIR TEMPERATURE SENSOR

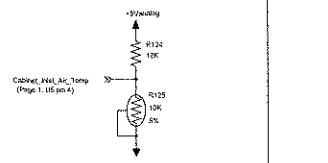

ON-BOARD VOLTAGE REGULATORS

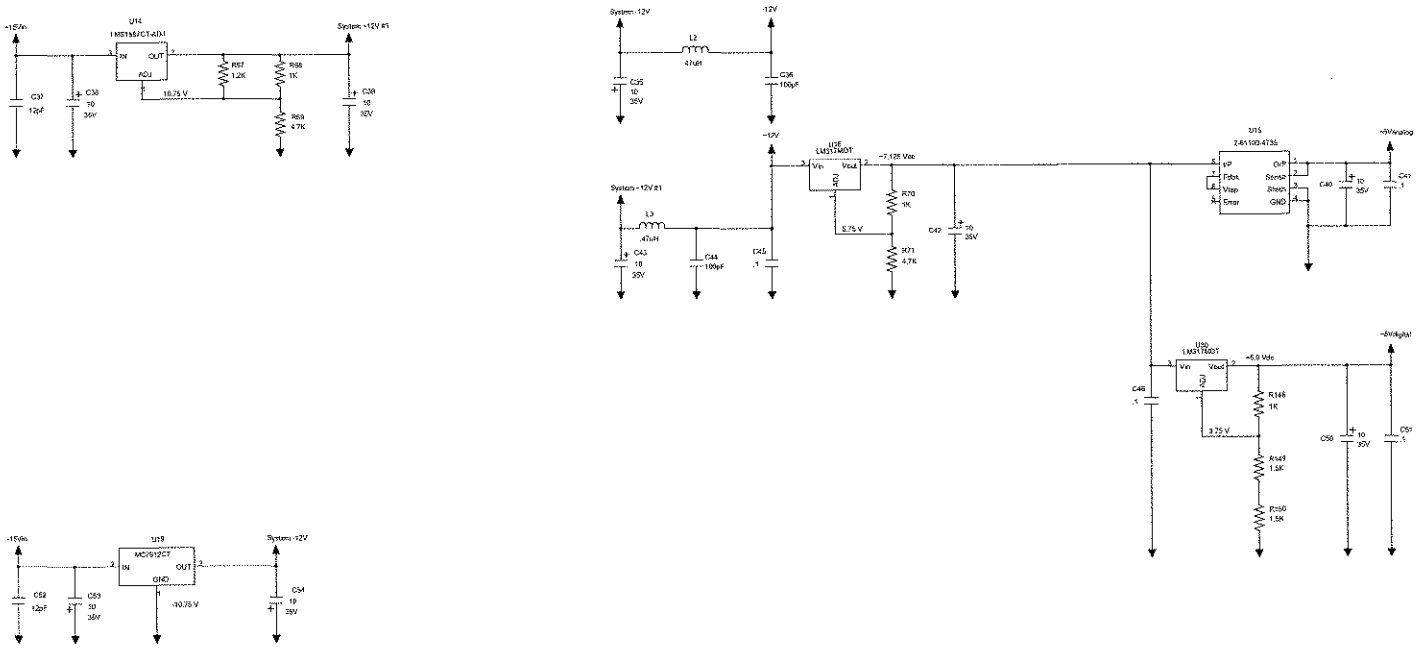

Axcera		REV	ECO	DATE	APV
THIS DRAWING IS THE PROPERTY OF AXCERA, IT SHALL NOT BE COPIED WITHOUT PERMISSION	TITLE	SCH, HX, HALF CABINET CTRL (1307840)			
MATERIAL ----	DWN REH 7/11/06	DWG. NO. 1307841			REV C0
FINISH ----	CHK REH 7/28/06				
	REL REH 7/28/06	D	SCALE ---	SHEET 3 OF 5	

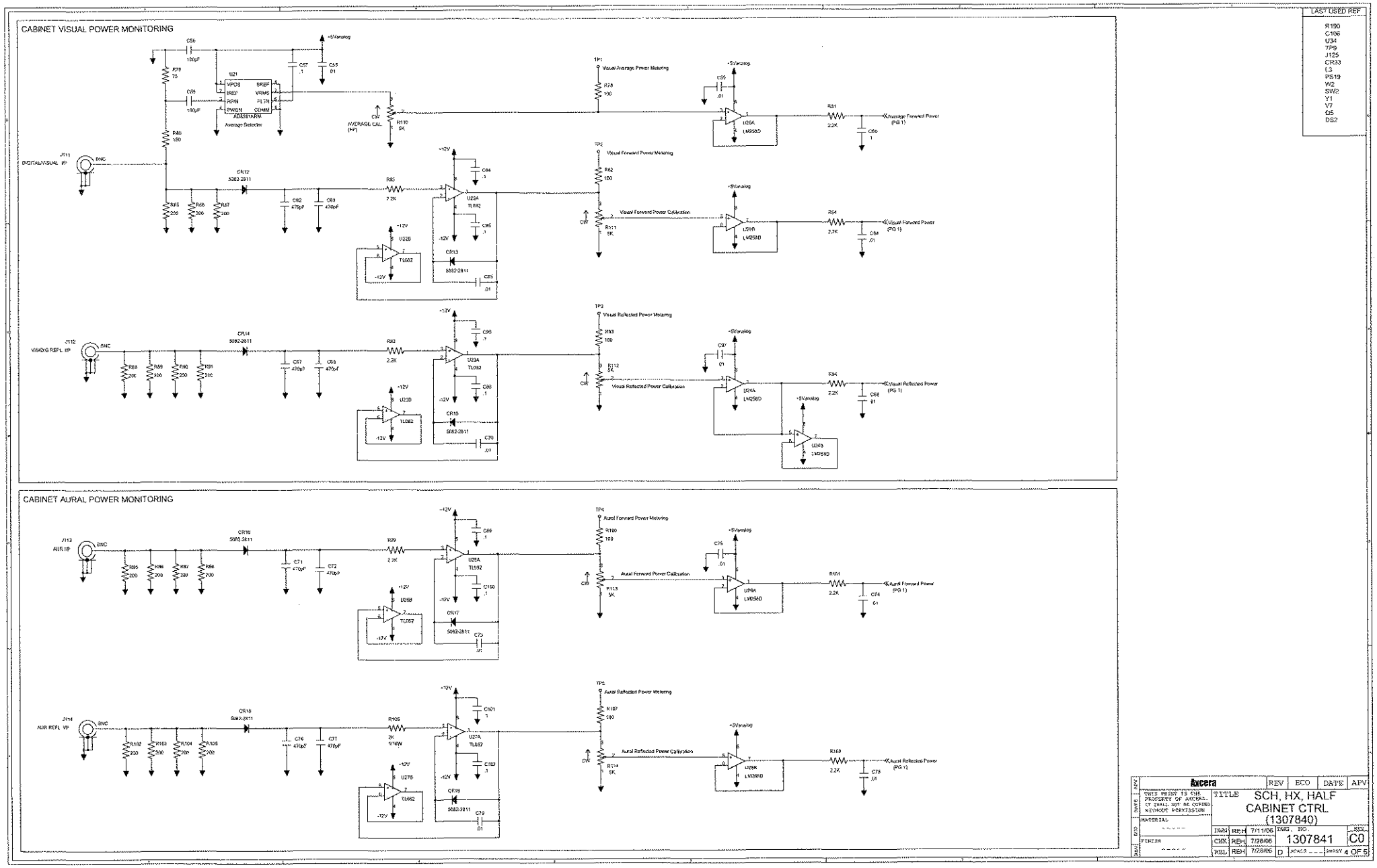
CABINET VISUAL POWER MONITORING
CABINET AURAL POWER MONITORING
LAST USED REF
R190
C106
U34
TP9
J125
CR33
L3
PS19
W2
SW2
Y1
V7
Q5
DS2
Visual Average Power Metering
Visual Forward Power Metering
Visual Forward Power Calibration
Visual Reflected Power Metering
Visual Reflected Power Calibration
Aural Forward Power Metering
Aural Forward Power Calibration
Aural Reflected Power Metering
Aural Reflected Power Calibration
Average Detector
Axcera
TITLE
SCH, HX, HALF CABINET CTRL (1307840)
DWG. NO.
1307841
REV
C0
SHEET 4 OF 5

AMPLIFIER SERIAL COMMUNICATION PORTS

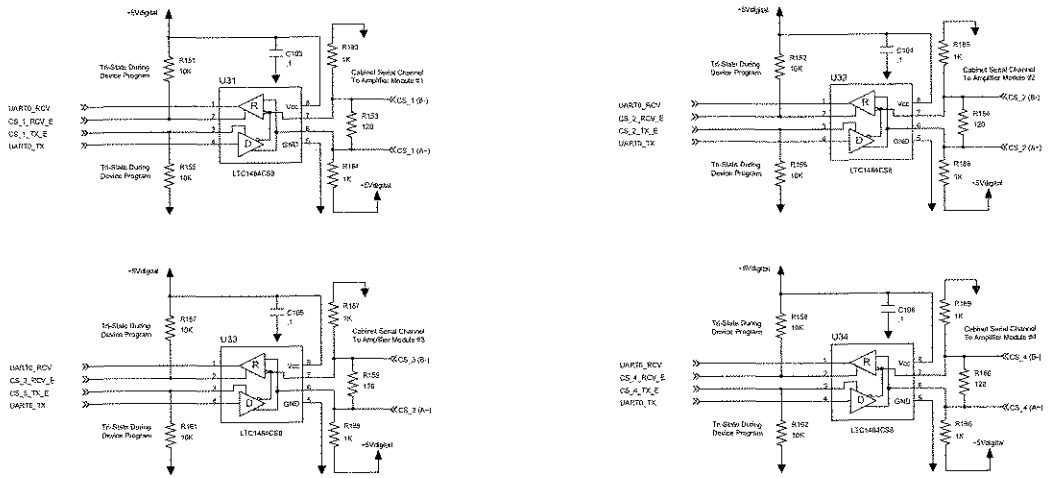

Circuit Description

Page 1:

Centered in page one is the microcontroller. This in-circuit programmable Atmel microcontroller is operated at 3.6864 MHz. Programming of this device is performed through J105. PF2 and PF3 are analog inputs connected to multiplexers U5 and U9. Desired multiplexer analog channels are selected by the setting of PA0, PA1, & PA2. PF0 and PF1 are used to monitor the +12V and -12V supplies to the board.

U12 is a watchdog IC used to hold the microcontroller in reset if the supply voltage is less than 4.21 Vdc; (1.25 Vdc < Pin 4 (IN) < Pin 2 (Vcc)). U12 momentarily resets the microcontroller if Pin 6 is not clocked every second.

Microcontroller UART 0 is used to communicate with each of the amplifier modules. Page 5 contains individual RS-485 transceiver ICs for serial communication. The RS-485 transceiver ICs contain components that maintain the receive channel in a high output state when the inputs are left open, shorted together, or terminated with no signal. Select microcontroller bits of ports A, B, E, and D are used to individually enable receiver channels and transmit channels.

Microcontroller UART 1 is used to communicate with the transmitter's exciter or exciter switcher. U8 is a RS-485 transceiver IC and Ux is a RS-232 serial port. J123 is used to provide RS-232 access to the controller. A standard NULL modem cable is needed to connect to a PC. Since microcontroller data input is either from an exciter or a remote computer, applications that write to J123 must monitor the data I/O of the exciter to know when their command can be sent.

Upper left corner U1 is used to determine where the amplifier control board is located. Rotary switch SW1 determines the cabinet number and thus the cabinet's serial address. The upper three bits of U1 can be used to determine pyhsical board characteristics. Bit 6 will be reserved for a half cabinet controller to determine if the controller is the top half controller or the bottom half controller.

U3 below U1 is used to monitor the status of the SCR controller. U7 is connected to an 8 position DIP switch which can be used to enable select firmware options.

U11 is used to control the SRC controller, the cabinet's cooling blower FET, and the processor operating LED. The use of this IC allows these circuits to remain stable during a microcontroller reset.

Page 2:

In the upper left section of page 2 are circuits that interface with the exhaust air temperature board and the low power supply. A diode is provided in the +12V output line to allow multiple cabinets to be connected to the coil of the external blower relay. An external cooling blower can be powered when any of the cabinets energize the external blower relay by pulling low the Cooling Blower Control line that is connected to the low side of the coil.
Voltage samples of the cabinet's high power AC inputs are monitored through inputs of J125. Diodes on the low power supply lines allow for the use of redundant cabinet power supplies where needed.

The Power Supply SCR Controller interface section routes signals need to control the high power supply. Power supply voltage feedback potentiometers now must be located in the power supply assembly.

Amplifier module interfaces are routed through J101. Each amplifier module has independent RS-485 transceivers and power sources that are current limitted with self-resetting fuses.

The RS485 interface section defines the RS-485 loop through connections that also contain the System Visual AGC and System Aural AGC signals. Circuitry in the lower portion of this block are used to convert cabinet AGC voltages into system AGC voltages. If the cabinet level voltages are greater that than the system levels, U13 increases its output to drive the system level to match the cabinet level. Cabinet AGC levels are set by the highest AGC voltage of the install amplifier modules.

Page 3:

R125 is used to measure the cabinet's inlet air temperature. Also defined on this page are the boards voltage regulators. The cabinet's +/-15V supply is used to generate +/-12V for all amplifier modules. The +12V signal is further regulated to +7 Vdc then regulated to seperate digital +5V and analog +5V. The digital +5V regulator is not as precise as the analog +5V regulator but it is capable of high current loads.

Page 4:

The RF detection circuits are feed into seperate dual stage op-amps to allow for op-amp locations that are kept close to the detectors. Once the detected voltage is amplified, most signals are feed through gain potentiometers before the signals are feed through unity gain amplifiers.

Page 5:

This page contains individual RS-485 transceiver ICs for serial communication with the amplifier modules. The RS-485 transceiver ICs contain components that maintain the receive channel in a high output state when the inputs are left open, shorted together, or terminated with no signal. The transmit and receive channels of each transceiver are individually controlled by the microcontroller. During reset or programming of the microcontroller, pull-up and pull-down resistors are used to place the transceivers in a tri-state condition. Each amplifier RS-485 connection is terminated with a 120 ohm resistor.

Axcera		REV	ECO	DATE	APV
THIS PRINT IS THE PROPERTY OF AXCERA, IT SHALL NOT BE COPIED WITHOUT PERMISSION	TITLE	SCH, HX, HALF CABINET CTRL (1307840)			
MATERIAL - - - -	DWN REH 7/11/06	DWG. NO. 1307841		REV C0	
FINISH - - - - -	CHK REH 7/28/06				
	ENG REH 7/28/06	D	SCALE - - -	SHEET 5 OF 5	

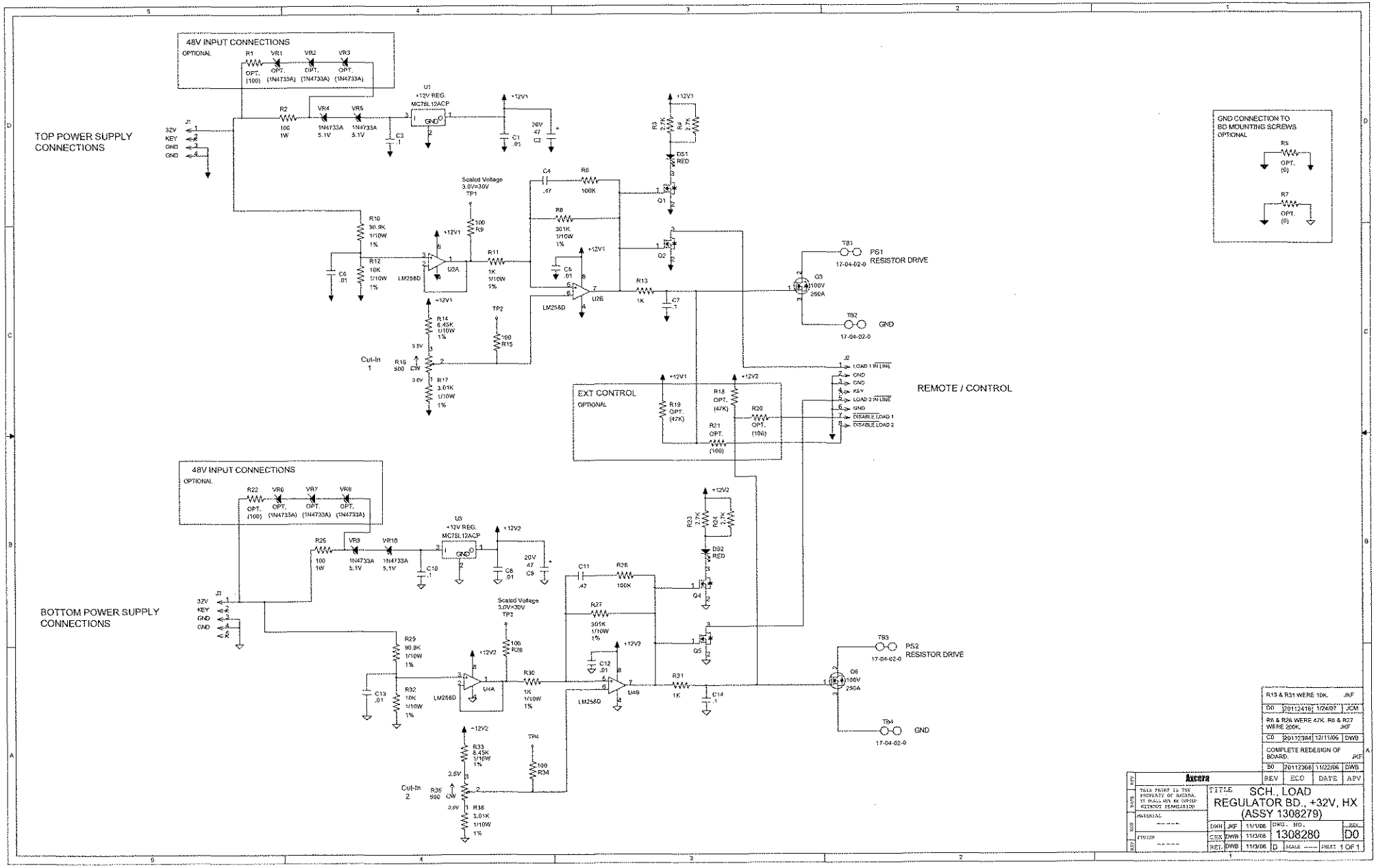
TOP POWER SUPPLY CONNECTIONS
48V INPUT CONNECTIONS
OPTIONAL
R1 OPT. (100)
VR1 OPT. (1N4733A)
VR2 OPT. (1N4733A)
VR3 OPT. (1N4733A)
J1
32V
KEY
GND
GND
R2 100 1W
VR4 1N4733A 5.1V
VR5 1N4733A 5.1V
U1 +12V REG. MC78L12ACP
GND
C3 .1
+12V1
C1 .01
20V 47 C2
R3 2.7K
R4 2.7K
DS1 RED
Q1
Q2
C4 .47
R6 100K
R8 301K 1/10W 1%
Scaled Voltage 3.0V=30V TP1
R9 100
R10 90.9K 1/10W 1%
R12 10K 1/10W 1%
C6 .01
U2A LM258D
R11 1K 1/10W 1%
C5 .01
U2B LM258D
R13 1K
C7 .1
TB1 PS1 RESISTOR DRIVE
17-04-02-0
Q3 100V 250A
TB2 GND
17-04-02-0
R14 6.45K 1/10W 1%
TP2
R15 100
Cut-In 1
R16 500 CW
R17 3.61K 1/10W 1%
EXT CONTROL
OPTIONAL
R19 OPT. (47K)
R18 OPT. (47K)
R20 OPT. (100)
R21 OPT. (100)
+12V2
J2
LOAD 1 IN LINE
GND
GND
KEY
LOAD 2 IN LINE
GND
DISABLE LOAD 1
DISABLE LOAD 2
REMOTE / CONTROL
GND CONNECTION TO BD MOUNTING SCREWS
OPTIONAL
R5 OPT. (0)
R7 OPT. (0)
BOTTOM POWER SUPPLY CONNECTIONS
48V INPUT CONNECTIONS
OPTIONAL
R22 OPT. (100)
VR6 OPT. (1N4733A)
VR7 OPT. (1N4733A)
VR8 OPT. (1N4733A)
J3
32V
KEY
GND
GND
R25 100 1W
VR9 1N4733A 5.1V
VR10 1N4733A 5.1V
U3 +12V REG. MC78L12ACP
GND
C16 .1
C8 .01
20V .47 C9
R23 2.7K
R24 2.7K
DS2 RED
Q4
Q5
C11 .47
R26 100K
R27 301K 1/10W 1%
Scaled Voltage 3.0V=30V TP3
R29 90.9K 1/10W 1%
R28 100
C13 .01
R32 10K 1/10W 1%
U4A LM258D
R30 1K 1/10W 1%
C12 .01
U4B LM258D
R31 1K
C14 .1
TB3 PS2 RESISTOR DRIVE
17-04-02-0
Q6 100V 250A
TB4 GND
17-04-02-0
-12V2
R33 8.45K 1/10W 1%
TP4
R34 100
Cut-In 2
R35 500 CW
R36 3.01K 1/10W 1%
R13 & R31 WERE 10K. JKF
D0 20112416 1/24/07 JCM
R6 & R26 WERE 47K. R8 & R27 WERE 200K. JKF
C0 20112394 12/11/06 DWB
COMPLETE REDESIGN OF BOARD. JKF
B0 20112368 11/22/06 DWB
Axcera
REV ECO DATE APV
TITLE SCH., LOAD REGULATOR BD., +32V, HX (ASSY 1308279)
DWN JKF 11/1/06
CHK DWB 11/3/06
APP DWB 11/3/06
DWG. NO. 1308280
REV D0
SCALE ---
SHEET 1 OF 1

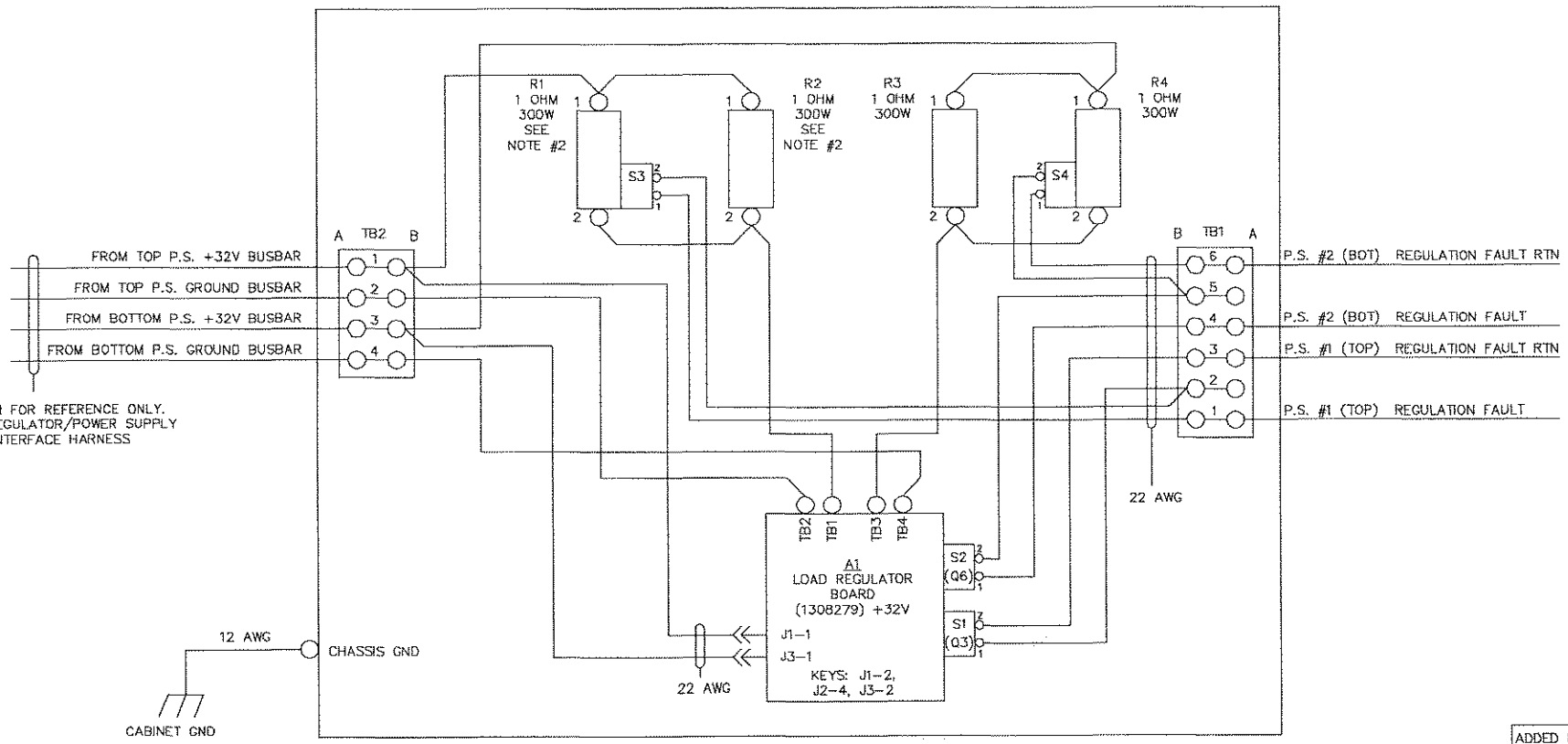

NOTES:

1. ALL WIRE IS 12 AWG UNLESS NOTED OTHERWISE.
2. R1, R2, S1, S3, A1-J1-1 AND ASSOCIATED WIRING IS NOT USED IN SYSTEMS USING ONLY A BOTTOM POWER SUPPLY.
3. S1, S2, S3, & S4 ARE N.C. AND OPEN AT 70° C.

REV	ECO	DATE	APV
CO	20112946	8/07/08	JCM
BO	20112448	1/29/07	JCM

ADDED HARNESS NOTE AT TB2. WB

S3 WAS UNDER R2. S4 WAS UNDER R3.
ADDED S3 TO NOTE 2.
NOTE 3 WAS "S1 AND S2 ARE N.C. . . . . ."
DELETED NOTE 4. (SAK)

Axcera.

THIS PRINT IS THE PROPERTY OF AXCERA. IT SHALL NOT BE COPIED WITHOUT PERMISSION.

MATERIAL ———

FINISH ———

TITLE I/C, LOAD REGULATOR ASSEMBLY +32V

DWN	WB	12/04/06	DWG. NO. 1308391
CHK	JCM	1/12/07	REV. CO
REL	JCM	1/12/07	C SCALE—— SHEET 1 OF 1

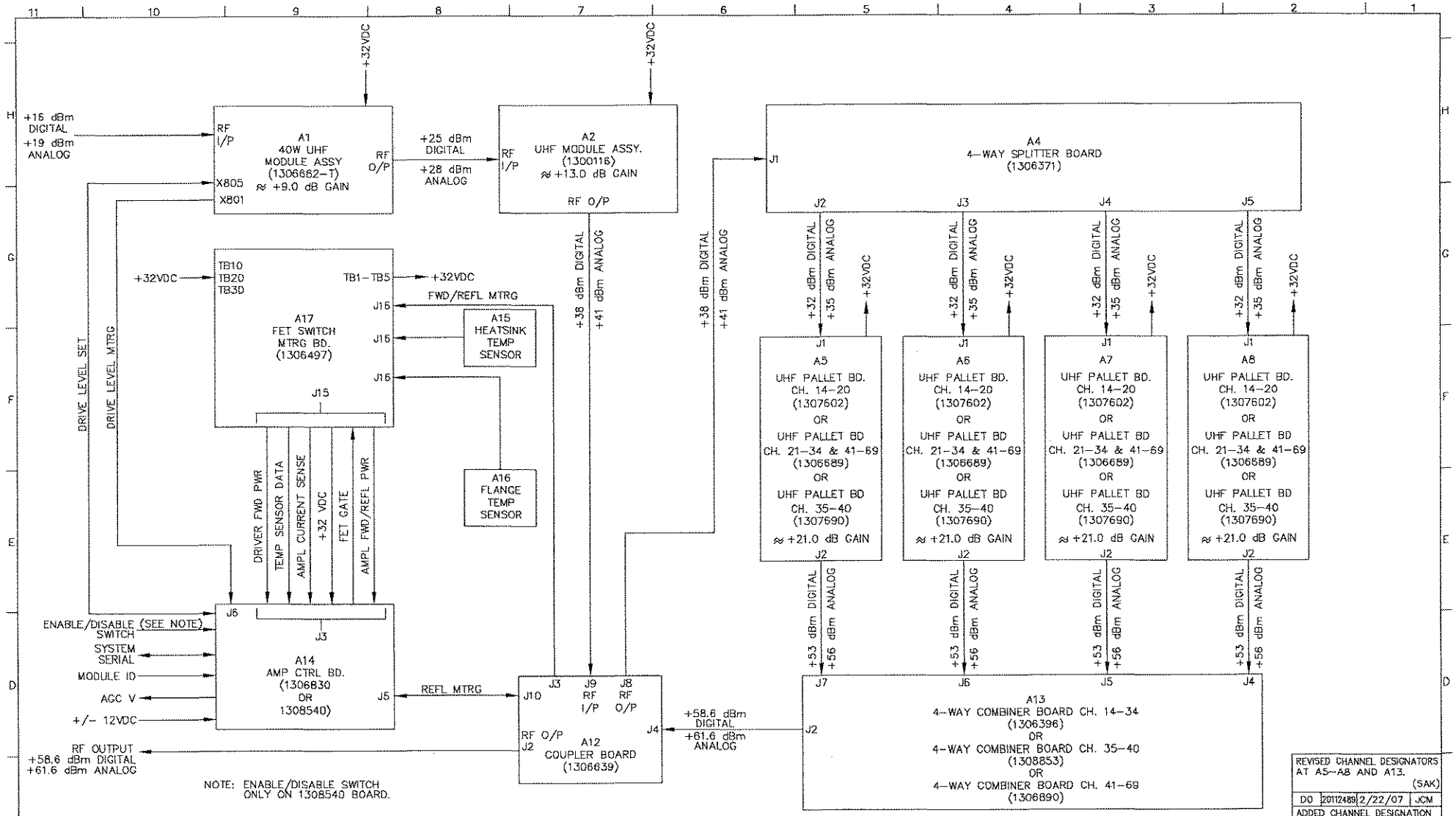

REV	ECO	DATE	APV

REVISED CHANNEL DESIGNATORS AT A5--A8 AND A13. (SAK)

DO	20112489	2/22/07	JCM

ADDED CHANNEL DESIGNATION AT A5 THRU A8 AND A13. AT A13, 1306890 WAS 1306715. (SAK)

CO	20112107	5/16/06	LRT

A14 AMP CNTRL BD WAS 1306522. ADDED J10 AT A12 CPLR BD. ADDED X801 AND X805 AT A1 40W UHF MODULE ASSY. (SAK)

BO	20112034	2/6/06	JCM

Axcera.

THIS PRINT IS THE PROPERTY OF AXCERA. IT SHALL NOT BE COPIED WITHOUT PERMISSION.

MATERIAL ------

FINISH ------

TITLE B/D, UHF AMPLIFIER MODULE, HX

DWN	RGE	11/11/05	DWG. NO. 1306712	REV DO
CHK	LRT	11/11/05		
REL	LRT	11/11/05	C SCALE ----	SHEET 1 OF 1

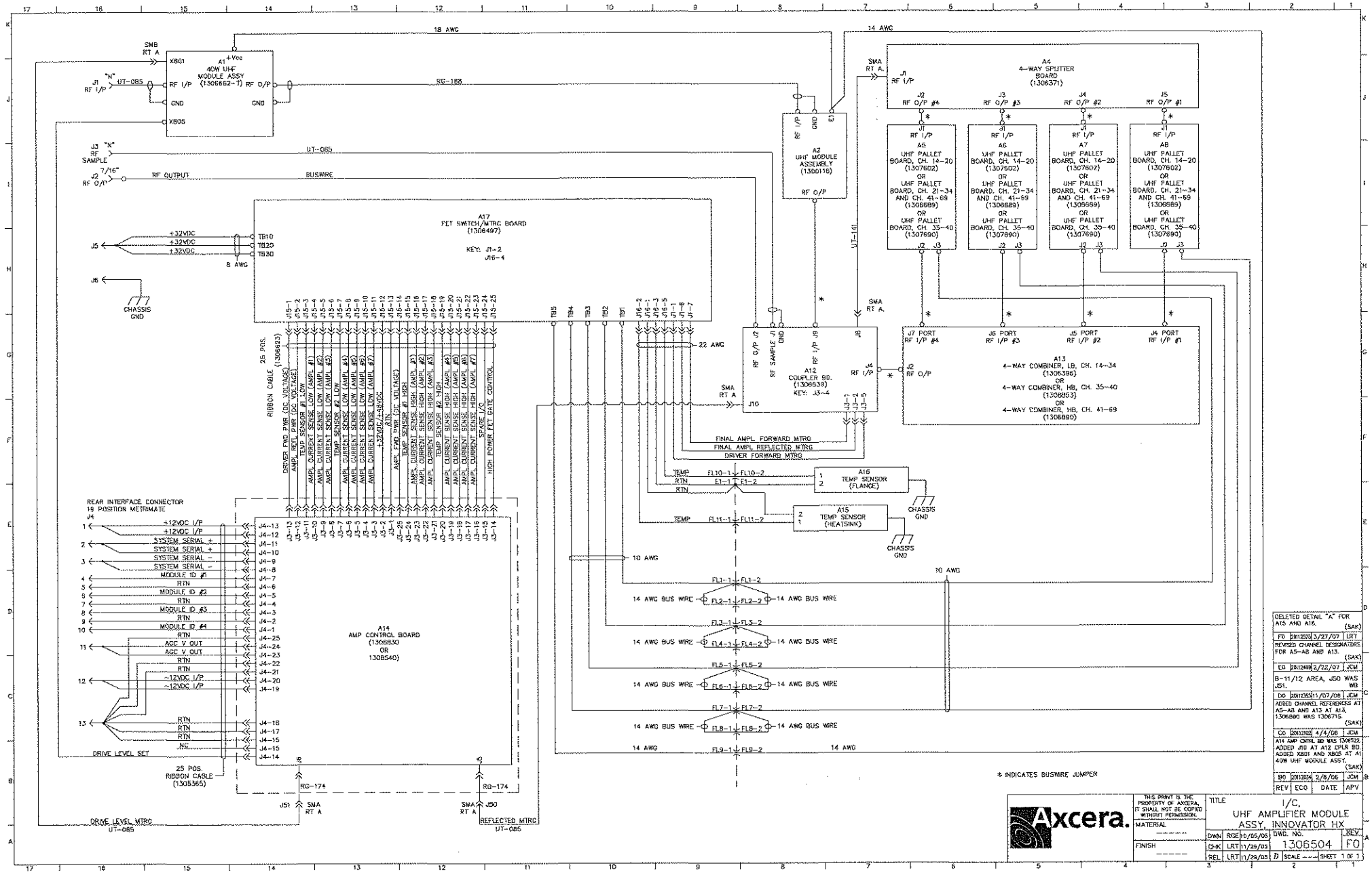

REV	ECO	DATE	APV
			DELETED DETAIL "A" FOR A15 AND A16. (SAK)
F0	20112520	3/27/07	LRT
			REVISED CHANNEL DESIGNATORS FOR A5-A8 AND A13. (SAK)
E0	20112408	2/22/07	JCM
			B-11/12 AREA, J50 WAS J51. WB
D0	20112365	11/07/06	JCM
			ADDED CHANNEL REFERENCES AT A5-A8 AND A13 AT A13, 1306890 WAS 1306715. (SAK)
C0	20112102	4/4/06	JCM
			A14 AMP CNTRL BD WAS 1306522. ADDED J10 AT A12 CPLR BD. ADDED XB01 AND XB05 AT A1 40W UHF MODULE ASSY. (SAK)
B0	20112034	2/8/06	JCM

Axcera.

THIS PRINT IS THE PROPERTY OF AXCERA, IT SHALL NOT BE COPIED WITHOUT PERMISSION.

MATERIAL ----

FINISH ----

TITLE I/C, UHF AMPLIFIER MODULE ASSY, INNOVATOR HX

DWG. NO. 1306504 REV. F0

DWN	RGE	10/05/05	
CHK	LRT	11/29/05	
REL	LRT	11/29/05	D

SCALE ---- SHEET 1 OF 1

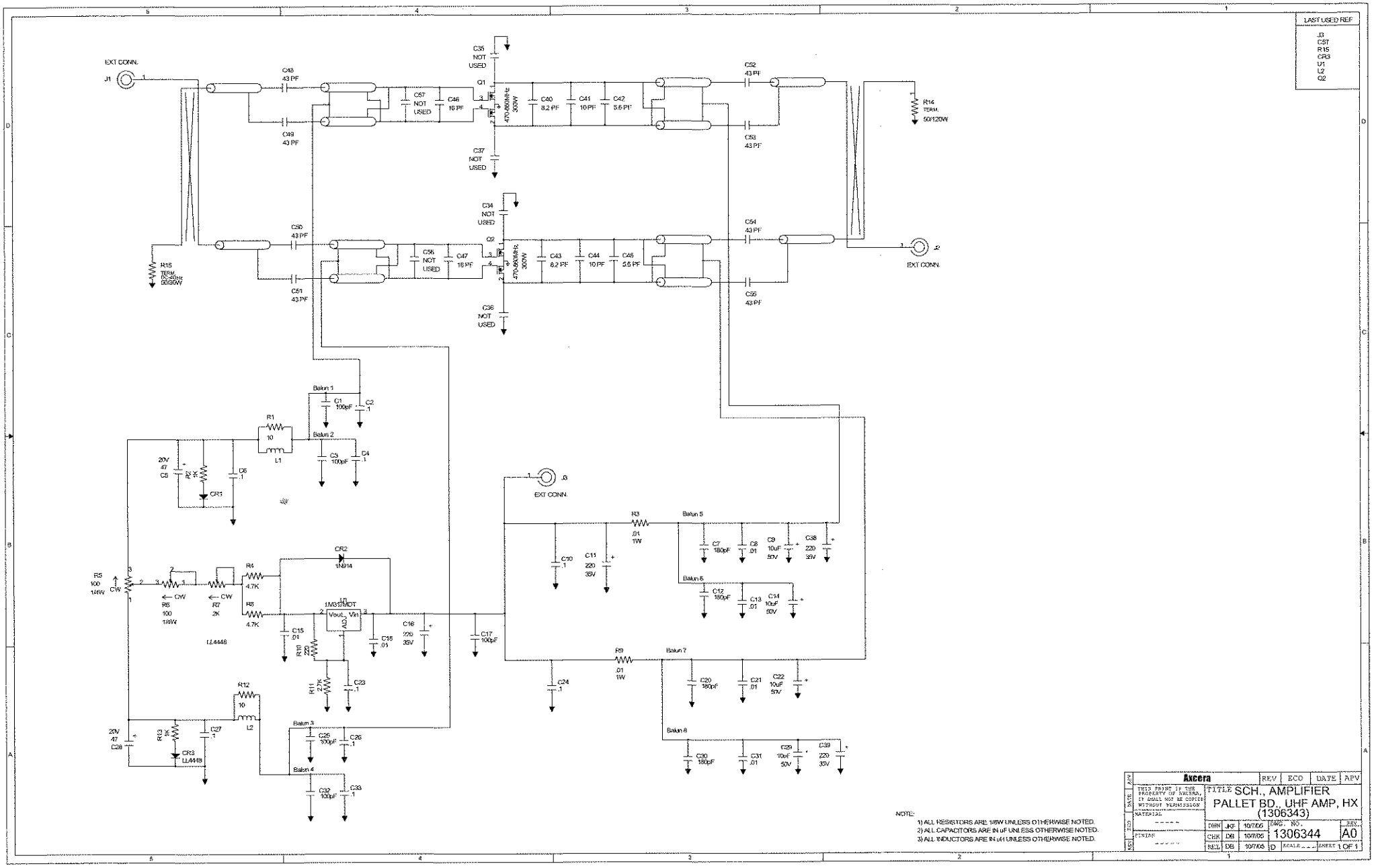
LAST USED REF
J3
C57
R15
CR3
U1
L2
Q2
EXT CONN.
J1
C48 43 PF
C49 43 PF
C35 NOT USED
Q1
C37 NOT USED
C57 NOT USED
C46 16 PF
470-860MHz 300W
C40 8.2 PF
C41 10 PF
C42 5.6 PF
C52 43 PF
C53 43 PF
R14 TERM. 50/120W
C34 NOT USED
Q2
C36 NOT USED
C50 43 PF
C51 43 PF
R15 TERM. DC-450Hz 50/50W
C56 NOT USED
C47 16 PF
470-860MHz 300W
C43 8.2 PF
C44 10 PF
C45 5.6 PF
C54 43 PF
C55 43 PF
J2
EXT CONN.
Balun 1
C1 100pF
C2 .1
R1 10
L1
Balun 2
C3 100pF
C4 .1
20V 47 C5
R2 1K
CR1
D6 .1
J3
EXT CONN.
R3 .01 1W
Balun 5
C7 180pF
C8 .01
C9 10uF 50V
C38 220 35V
C10 .1
C11 220 35V
Balun 6
C12 180pF
C13 .01
C14 10uF 50V
R5 100 1MW
CW
R6 100 1MW
R7 2K
R4 4.7K
R8 4.7K
CR2 1N914
U1 LM317MDT
Vout Vin
ADJ
C15 .01
R10 220
C18 .01
C16 220 35V
C17 100pF
LL4448
R9 .01 1W
Balun 7
C20 180pF
C21 .01
C22 10uF 50V
C24 .1
R11 2.7K
C23 .1
R12 10
L2
20V 47 C28
R13 1K
C27 .1
CR3 LL4448
Balun 3
C25 100pF
C26 .1
Balun 4
C32 100pF
C33 .1
Balun 8
C30 180pF
C31 .01
C29 10uF 50V
C39 220 35V
NOTE:
1) ALL RESISTORS ARE 1/8W UNLESS OTHERWISE NOTED.
2) ALL CAPACITORS ARE IN uF UNLESS OTHERWISE NOTED.
3) ALL INDUCTORS ARE IN uH UNLESS OTHERWISE NOTED.
Axcera
REV ECO DATE APV
THIS PRINT IS THE PROPERTY OF AXCERA, IT SHALL NOT BE COPIED WITHOUT PERMISSION
TITLE SCH., AMPLIFIER
PALLET BD., UHF AMP, HX
(1306343)
MATERIAL
FINISH
DWN JG 10/7/05
CHK DB 10/7/05
REL DB 10/7/05
DWG. NO. 1306344
REV. A0
SCALE
SHEET 1 OF 1

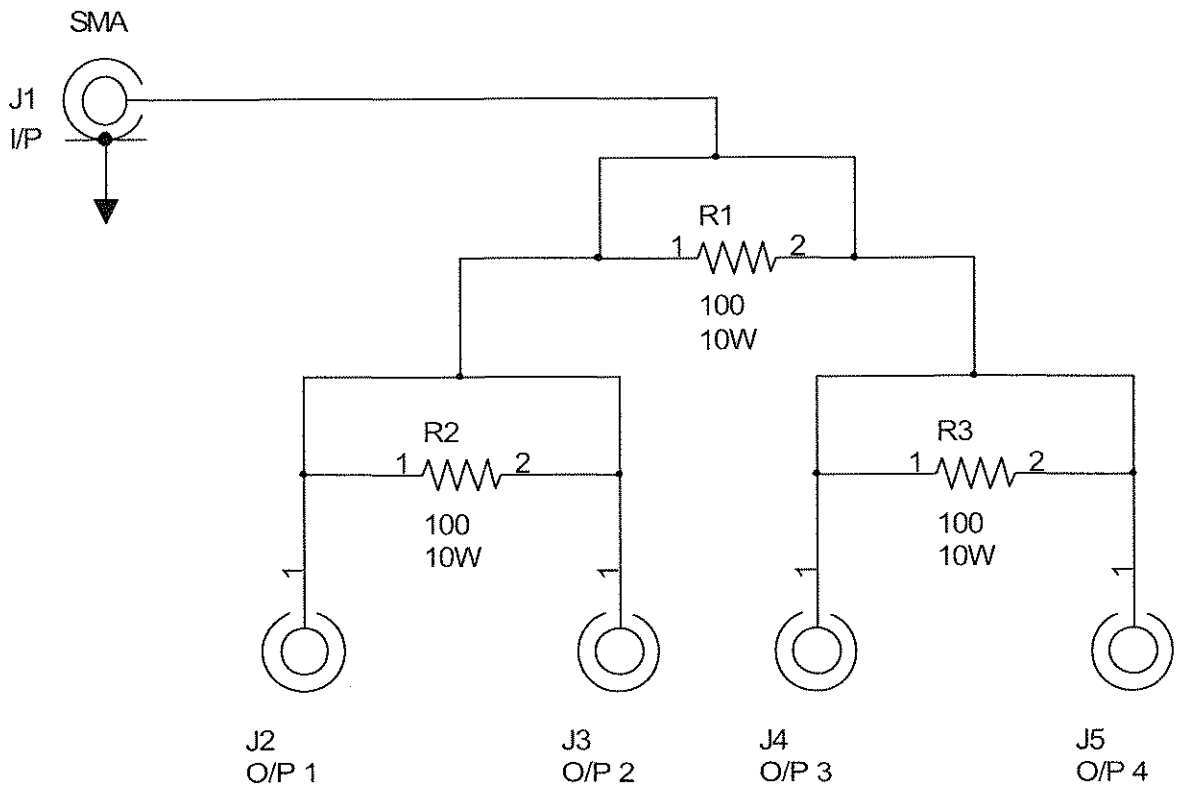

REV	ECO	DATE	APV
B0	20111890	9/20/05	PWK

R1 - R3 CHGD FROM 5% TO 2%. JKF

Axcera

THIS PRINT IS THE PROPERTY OF AXCERA, IT SHALL NOT BE COPIED WITHOUT PERMISSION

MATERIAL

FINISH

TITLE SCH., 4 WAY SPLITTER, UHF AMP., HX (1306371)

DWN	JKF	8/17/05	DWG. NO. 1306372	REV B0
CHK	PWK	9/19/05		
REL	PWK	9/19/05	A	SCALE --- SHEET 1 OF 1

APV DATE ECO REV

LAST USED REF
J7 R17

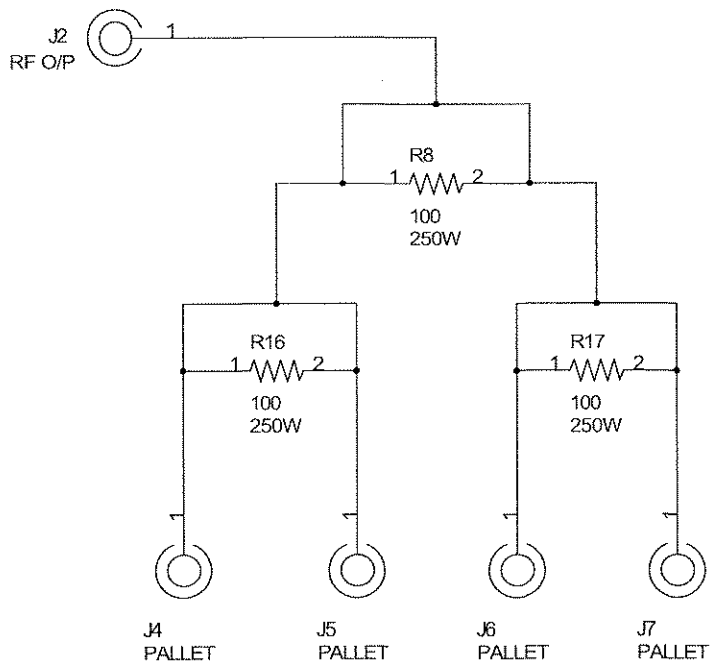

REV	ECO	DATE	APV
B0	20111942	11/7/05	TB

REMOVED COUPLER SECTION OF PCB. JKF

Axcera

THIS PRINT IS THE PROPERTY OF AXCERA, IT SHALL NOT BE COPIED WITHOUT PERMISSION

MATERIAL

FINISH

TITLE SCH, 4 WAY COMBINER, UHF AMP, HX (1306396)

DWN	JKF	8/26/05	DWG. NO. 1306397	REV B0
CHK	DB	9/7/05		
REL	DB	9/7/05	B SCALE ---	SHEET 1 OF 1

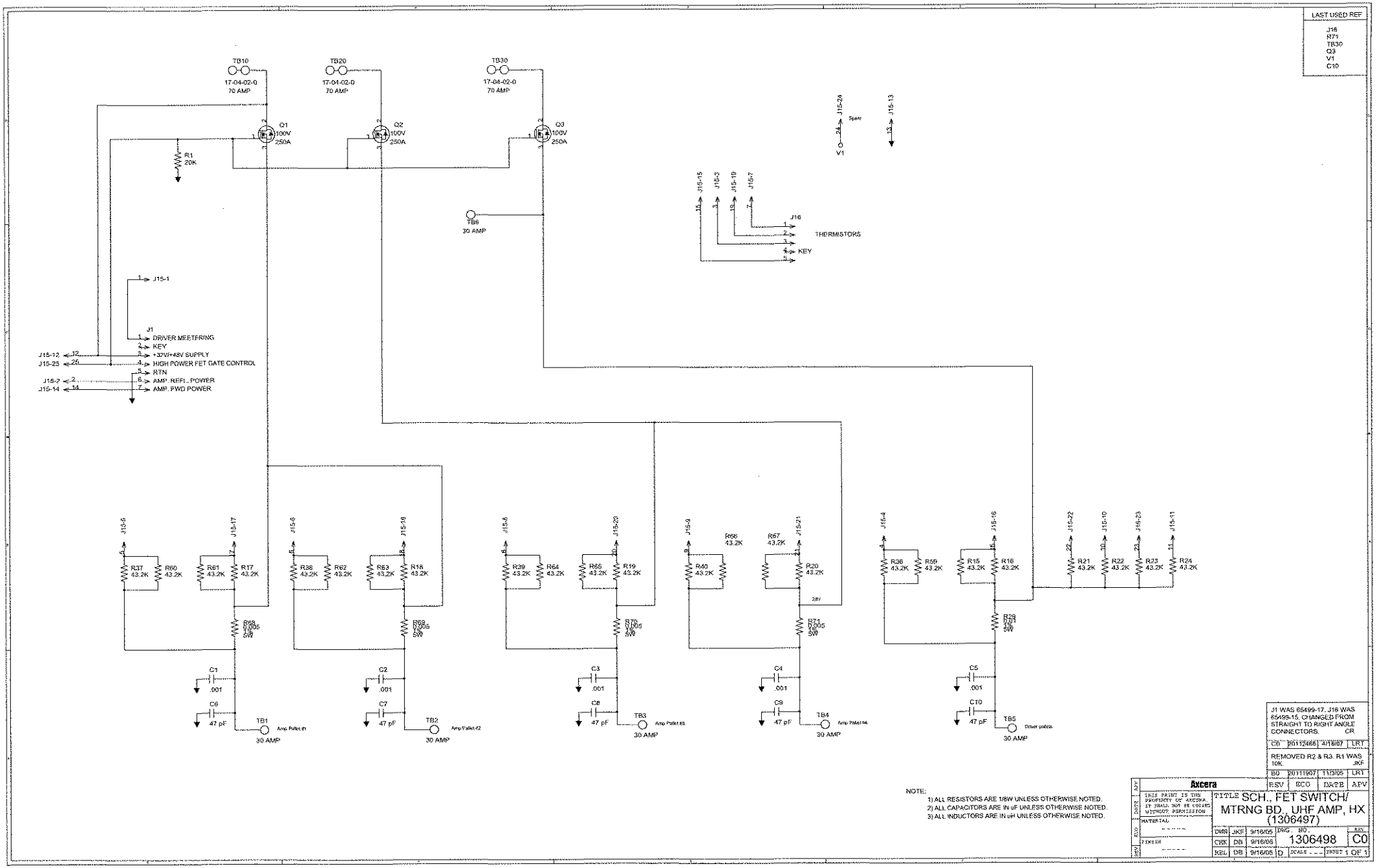
LAST USED REF
J16
R79
TB30
Q3
V1
C10
TB10
17-04-02-0
70 AMP
TB20
17-04-02-0
70 AMP
TB30
17-04-02-0
70 AMP
Q1
100V
250A
Q2
100V
250A
Q3
100V
250A
R1
20K
TB6
30 AMP
J15-24
Spare
J15-13
J15-15
J15-3
J15-19
J15-7
J16
THERMISTORS
KEY
J15-1
J1
DRIVER METERING
KEY
+37V/+48V SUPPLY
HIGH POWER FET GATE CONTROL
RTN
AMP. REFL. POWER
AMP. FWD POWER
J15-12
J15-25
J15-7
J15-14
R37 43.2K
R60 43.2K
R61 43.2K
R17 43.2K
R38 43.2K
R62 43.2K
R63 43.2K
R18 43.2K
R39 43.2K
R64 43.2K
R65 43.2K
R19 43.2K
R40 43.2K
R66 43.2K
R67 43.2K
R20 43.2K
R36 43.2K
R59 43.2K
R15 43.2K
R16 43.2K
R21 43.2K
R22 43.2K
R23 43.2K
R24 43.2K
R68 0.005 5W
R69 0.005 5W
R70 0.005 5W
R71 0.005 5W
R72 0.005 5W
C1 .001
C2 .001
C3 .001
C4 .001
C5 .001
C6 47 pF
C7 47 pF
C8 47 pF
C9 47 pF
C10 47 pF
TB1
Amp Pallet #1
30 AMP
TB2
Amp Pallet #2
30 AMP
TB3
Amp Pallet #3
30 AMP
TB4
Amp Pallet #4
30 AMP
TB5
Driver pallets
30 AMP
J1 WAS 85499-17, J16 WAS 85499-15, CHANGED FROM STRAIGHT TO RIGHT ANGLE CONNECTORS. CR
C0 20112466 4/18/07 LRT
REMOVED R2 & R3. R1 WAS 10K. JKF
B0 20111907 11/3/05 LRT
NOTE:
1) ALL RESISTORS ARE 1/8W UNLESS OTHERWISE NOTED.
2) ALL CAPACITORS ARE IN uF UNLESS OTHERWISE NOTED.
3) ALL INDUCTORS ARE IN uH UNLESS OTHERWISE NOTED.
Axcera
ESV
ECO
DAGB
APV
THIS PRINT IS THE PROPERTY OF AXCERA IT SHALL NOT BE COPIED WITHOUT PERMISSION
TITLE SCH., FET SWITCH/ MTRNG BD., UHF AMP, HX (1306497)
MATERIAL
FINISH
DRN JKF 9/16/05
CHK DB 9/16/05
ENGL DB 9/16/05
DWG NO 1306498
REV C0
SCALE
SHEET 1 OF 1

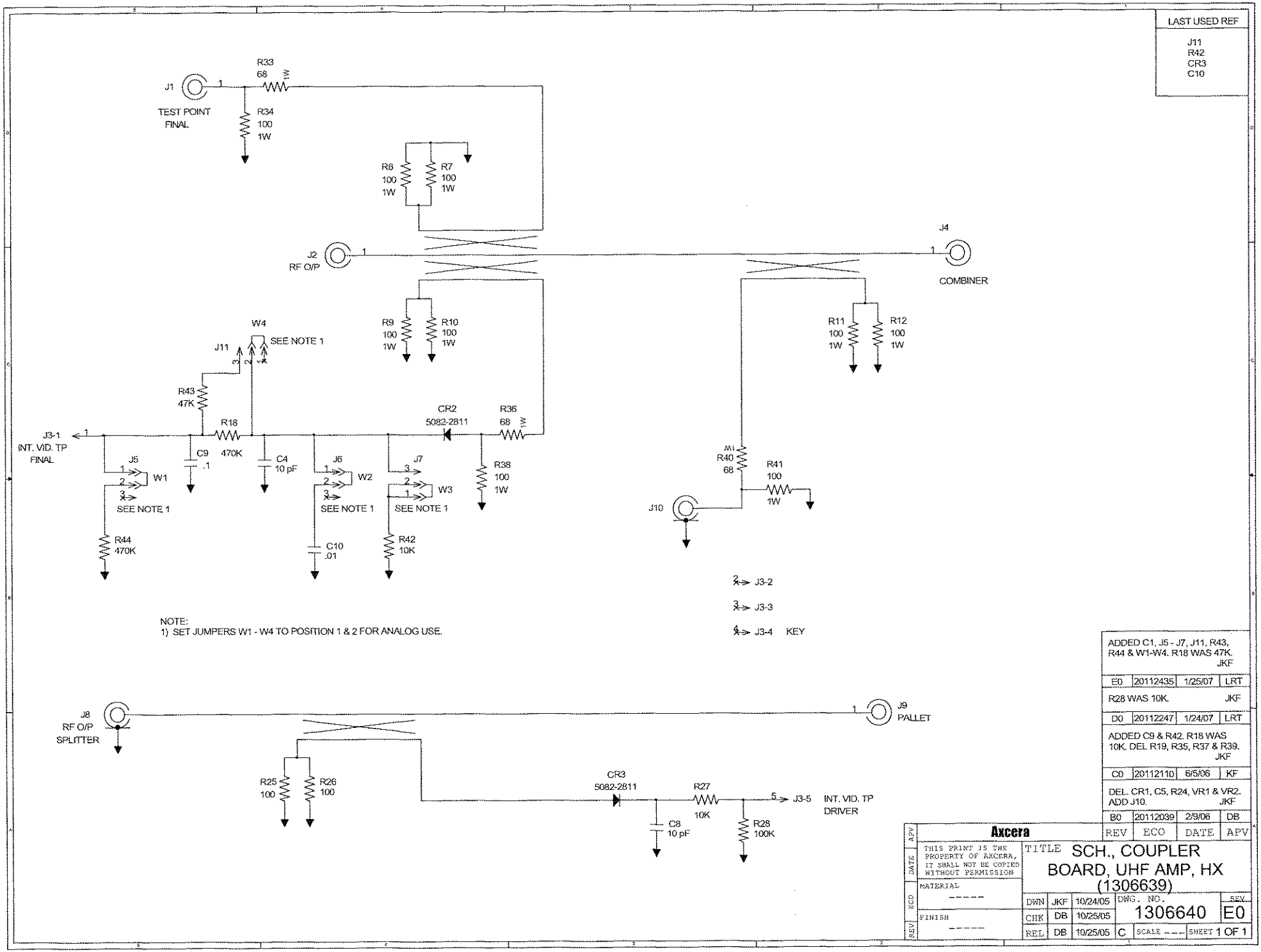
LAST USED REF
J11
R42
CR3
C10
J1
TEST POINT
FINAL
R33
68
1W
R34
100
1W
R6
100
1W
R7
100
1W
J2
RF O/P
J4
COMBINER
R9
100
1W
R10
100
1W
R11
100
1W
R12
100
1W
W4
SEE NOTE 1
J11
R43
47K
J3-1
INT. VID. TP
FINAL
R18
470K
C9
.1
C4
10 pF
CR2
5082-2811
R36
68
1W
J5
W1
SEE NOTE 1
J6
W2
SEE NOTE 1
J7
W3
SEE NOTE 1
R38
100
1W
R44
470K
C10
.01
R42
10K
R40
68
R41
100
1W
J10
J3-2
J3-3
J3-4 KEY
NOTE:
1) SET JUMPERS W1 - W4 TO POSITION 1 & 2 FOR ANALOG USE.
J8
RF O/P
SPLITTER
J9
PALLET
R25
100
R26
100
CR3
5082-2811
R27
10K
J3-5
INT. VID. TP
DRIVER
C8
10 pF
R28
100K
ADDED C1, J5 - J7, J11, R43, R44 & W1-W4. R18 WAS 47K. JKF
E0 20112435 1/25/07 LRT
R28 WAS 10K. JKF
D0 20112247 1/24/07 LRT
ADDED C9 & R42. R18 WAS 10K. DEL R19, R35, R37 & R39. JKF
C0 20112110 6/5/06 KF
DEL. CR1, C5, R24, VR1 & VR2. ADD J10. JKF
B0 20112039 2/9/06 DB
REV ECO DATE APV
Axcera
THIS PRINT IS THE PROPERTY OF AXCERA, IT SHALL NOT BE COPIED WITHOUT PERMISSION
MATERIAL
FINISH
TITLE SCH., COUPLER BOARD, UHF AMP, HX (1306639)
DWN JKF 10/24/05
CHK DB 10/25/05
REL DB 10/25/05
DWG. NO. 1306640
REV. E0
C
SCALE ---
SHEET 1 OF 1

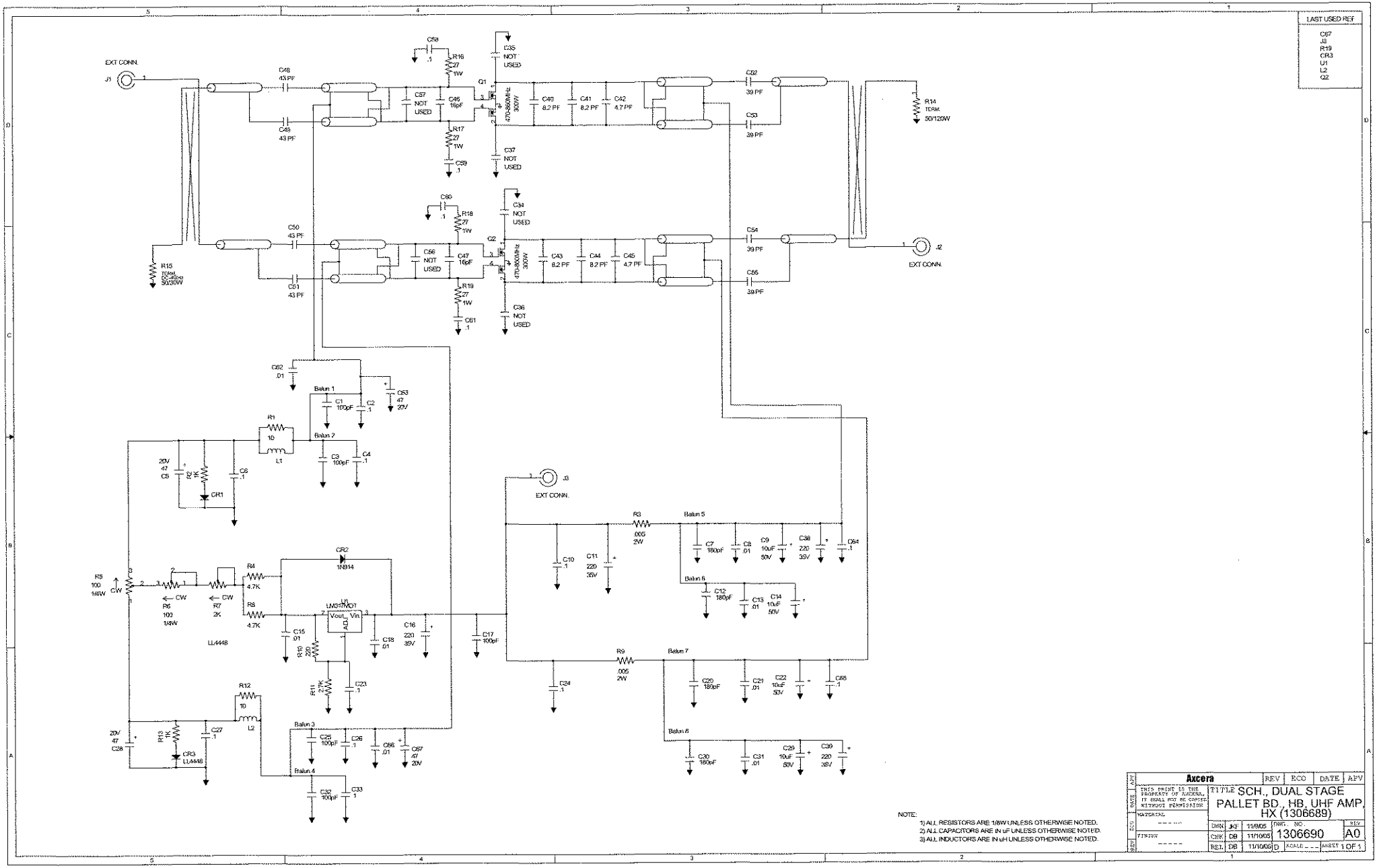
LAST USED REF
C67
J3
R19
CR3
U1
L2
Q2
EXT CONN.
J1
C48 43 PF
C49 43 PF
C58 .1
R16 27 1W
C57 NOT USED
C46 16pF
R17 27 1W
C59 .1
C35 NOT USED
C37 NOT USED
Q1
470-860MHz 300W
C40 8.2 PF
C41 8.2 PF
C42 4.7 PF
C52 39 PF
C53 39 PF
R14 TERM. 50/120W
C50 43 PF
C51 43 PF
R15 TERM DC-450MHz 50/30W
C60 .1
R18 27 1W
C56 NOT USED
C47 16pF
R19 27 1W
C61 .1
C34 NOT USED
C36 NOT USED
Q2
470-860MHz 300W
C43 8.2 PF
C44 8.2 PF
C45 4.7 PF
C54 39 PF
C55 39 PF
J2
EXT CONN.
C62 .01
Balun 1
C1 100pF
C2 .1
C63 47 20V
R1 10
L1
Balun 2
C3 100pF
C4 .1
20V 47 C5
R2 1K
C6 .1
CR1
J3
EXT CONN.
R3 .005 2W
Balun 5
C7 180pF
C8 .01
C9 10uF 50V
C38 220 35V
C64 .1
C10 .1
C11 220 35V
Balun 6
C12 180pF
C13 .01
C14 10uF 50V
R5 100 1/4W
CW
R6 100 1/4W
R7 2K
R4 4.7K
R8 4.7K
CR2 1N914
U1 LM317MDT
Vout Vin ADJ
C15 .01
R10 220
C18 .01
C16 220 35V
C17 100pF
LL4448
R9 .005 2W
Balun 7
C20 180pF
C21 .01
C22 10uF 50V
C65 .1
C24 .1
R11 27K
C23 .1
R12 10
L2
20V 47 C28
R13 1K
C27 .1
CR3 LL4448
Balun 3
C29 100pF
C26 .1
C66 .01
C67 47 20V
Balun 4
C32 100pF
C33 .1
Balun 8
C30 180pF
C31 .01
C39 220 35V
NOTE:
1) ALL RESISTORS ARE 1/8W UNLESS OTHERWISE NOTED.
2) ALL CAPACITORS ARE IN uF UNLESS OTHERWISE NOTED.
3) ALL INDUCTORS ARE IN uH UNLESS OTHERWISE NOTED.
Axcera
REV ECO DATE APV
THIS PRINT IS THE PROPERTY OF AXCERA, IT SHALL NOT BE COPIED WITHOUT PERMISSION
MATERIAL
FINISH
TITLE SCH., DUAL STAGE PALLET BD., HB, UHF AMP. HX (1306689)
DWN JKJ 11/8/05
CHK DB 11/10/05
REL DB 11/10/05
DWG. NO. 1306690
REV A0
SCALE
SHEET 1 OF 1

LAST USED REF
J5 R6 BAL6

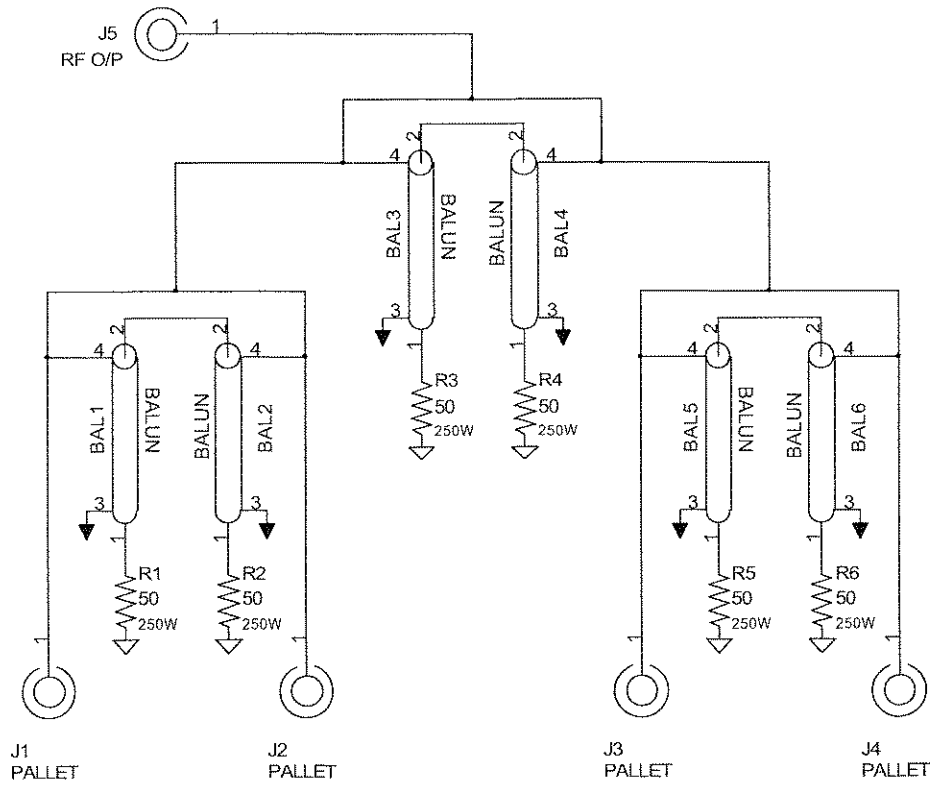

APV	Axcera	REV	ECO	DATE	APV
DATE	THIS PRINT IS THE PROPERTY OF AXCERA, IT SHALL NOT BE COPIED WITHOUT PERMISSION	TITLE	SCH., 4 WAY COMBINER, UHF HB, HX (1306890)		
ECO	MATERIAL ------	DWN	JKF	1/12/06	DWG. NO. 1306891 REV A0
REV	FINISH ------	CHK	PWK	1/12/06	
		REL	PWK	1/12/06	B SCALE --- SHEET 1 OF 1

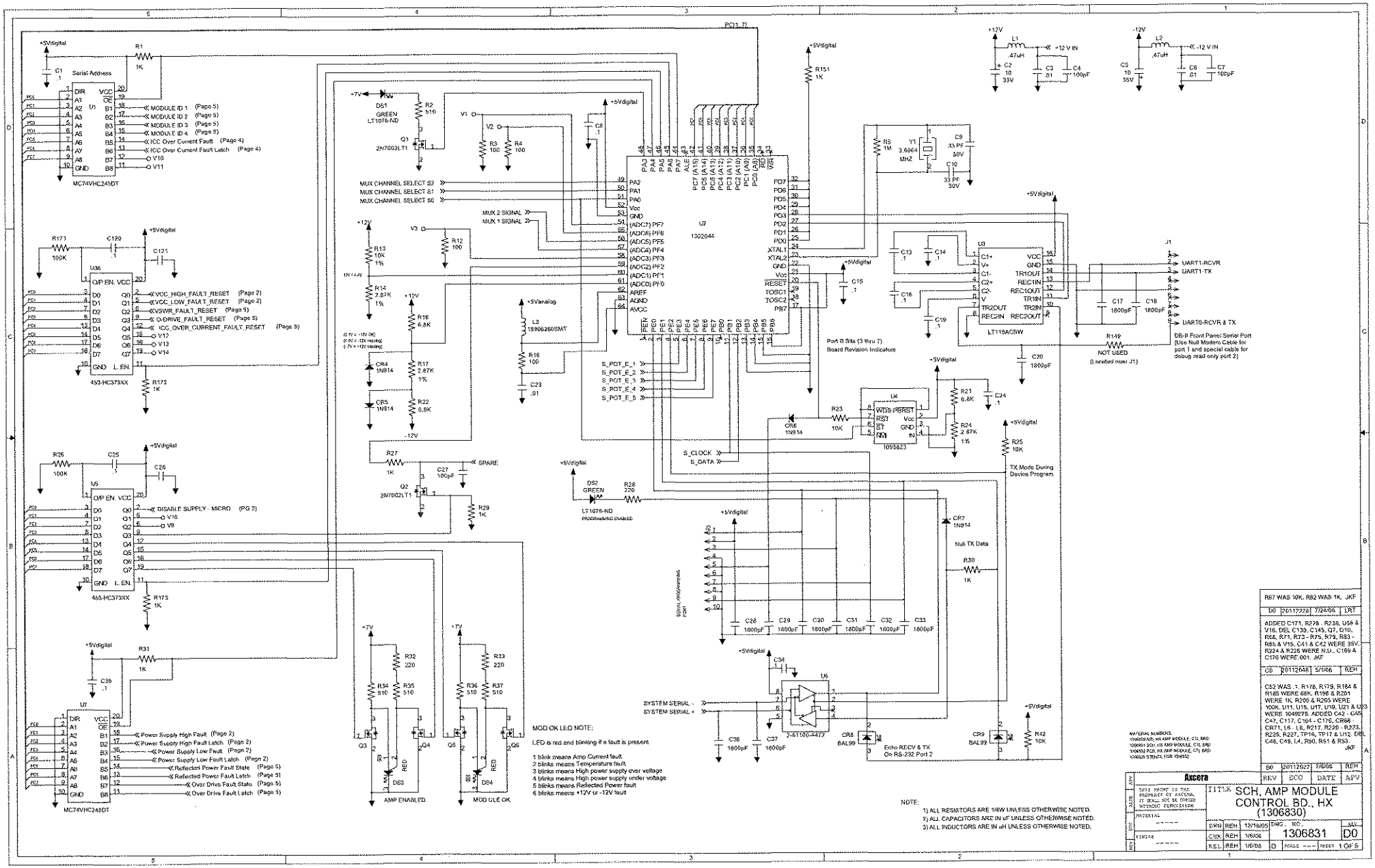
Serial Address
MC74VHC245DT
MODULE ID 1 (Page 5)
MODULE ID 2 (Page 5)
MODULE ID 3 (Page 5)
MODULE ID 4 (Page 5)
ICC Over Current Fault (Page 4)
ICC Over Current Fault Latch (Page 4)
V10
V11
MUX CHANNEL SELECT S2
MUX CHANNEL SELECT S1
MUX CHANNEL SELECT S0
MUX 2 SIGNAL
MUX 1 SIGNAL
VCC_HIGH_FAULT_RESET (Page 2)
VCC_LOW_FAULT_RESET (Page 2)
VSWR_FAULT_RESET (Page 5)
O-DRIVE_FAULT_RESET (Page 5)
ICC_OVER_CURRENT_FAULT_RESET (Page 5)
V12
V13
V14
453-HC373XX
DISABLE SUPPLY - MICRO (PG 2)
V15
V9
463-HC373XX
Power Supply High Fault (Page 2)
Power Supply High Fault Latch (Page 2)
Power Supply Low Fault (Page 2)
Power Supply Low Fault Latch (Page 2)
Reflected Power Fault State (Page 5)
Reflected Power Fault Latch (Page 5)
Over Drive Fault State (Page 5)
Over Drive Fault Latch (Page 5)
MC74VHC245DT
AMP ENABLED
MODULE OK
SPARE
S_POT_E_1
S_POT_E_2
S_POT_E_3
S_POT_E_4
S_POT_E_5
S_CLOCK
S_DATA
Port B Bits (3 thru 7)
Board Revision Indicators
TX Mode During Devices Program
Null TX Data
Echo RECV & TX On RS-232 Port 2
SYSTEM SERIAL -
SYSTEM SERIAL +
UART1-RCVR
UART1-TX
UART0-RCVR & TX
DB-9 Front Panel Serial Port (Use Null Modem Cable for port 1 and special cable for debug read only port 2)
NOT USED (Located near J1)
LT1076-ND
PROGRAMMING ENABLED
MOD OK LED NOTE:
LED is red and blinking if a fault is present
1 blink means Amp Current fault
2 blinks means Temperature fault
3 blinks means High power supply over voltage
4 blinks means High power supply under voltage
5 blinks means Reflected Power fault
6 blinks means +12V or -12V fault
NOTE:
1) ALL RESISTORS ARE 1/8W UNLESS OTHERWISE NOTED.
2) ALL CAPACITORS ARE IN uF UNLESS OTHERWISE NOTED.
3) ALL INDUCTORS ARE IN uH UNLESS OTHERWISE NOTED.
R87 WAS 10K, R82 WAS 1K. JKF
D0 20112226 7/24/06 LRT
ADDED C171, R278 - R238, U56 & V16. DEL C139, C145, Q7, Q10, R66, R71, R73 - R75, R79, R83 - R85 & V15. C41 & C42 WERE 35V. R224 & R226 WERE N.U.. C169 & C170 WERE .001. JKF
C0 20112048 5/1/06 REH
C52 WAS .1. R178, R179, R184 & R185 WERE 68K. R196 & R201 WERE 1K. R200 & R205 WERE 100K. U11, U15, U17, U19, U21 & U23 WERE 1040278. ADDED C42 - C45, C47, C137, C164 - C176, CR66 - CR71, L6 - L8, R217, R220 - R223, R225, R227, TP16, TP17 & U112. DEL C48, C49, L4, R50, R51 & R53. JKF
B0 20112027 3/8/06 REH
Axcera
REV ECO DATE APV
TITLE SCH, AMP MODULE CONTROL BD., HX (1306830)
DWG REH 12/16/05
CHK REH 1/6/06
REL REH 1/6/06
DWG. NO. 1306831
REV D0
SCALE ---
SHEET 1 OF 5

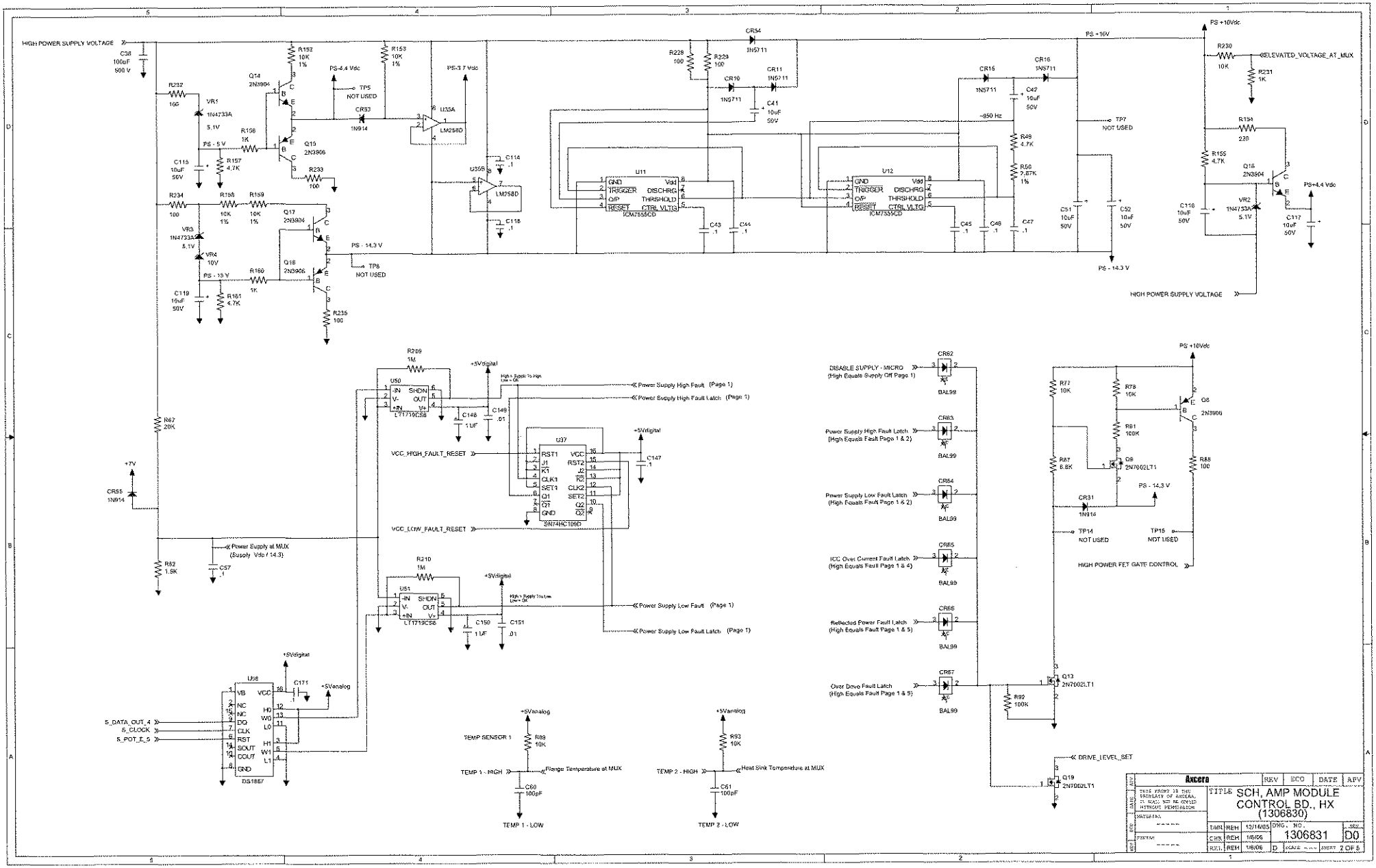
HIGH POWER SUPPLY VOLTAGE
C38 1000uF 500 V
R232 100
VR1 1N4733A 5.1V
Q14 2N3904
R152 10K 1%
R153 10K 1%
PS-4.4 Vdc
TP5 NOT USED
CR53 1N914
PS-3.7 Vdc
U15A LM258D
U15B LM258D
R156 1K
Q15 2N3906
R157 4.7K
C115 10uF 50V
R233 100
PS - 5 V
R234 100
R158 10K 1%
R159 10K 1%
Q17 2N3904
VR3 1N4733A 5.1V
VR4 10V
Q16 2N3906
R160 1K
R161 4.7K
C119 10uF 50V
R235 100
PS - 14.3 V
TP6 NOT USED
PS - 15 V
C114 .1
C118 .1
CR34 1N5711
R228 100
R229 100
CR10 1N5711
CR11 1N5711
C41 10uF 50V
U11 ICM7555CD
GND TRIGGER OUTPUT RESET DISCHRG THRESHOLD CTRL VLTG Vdd
C43 .1
C44 .1
CR16 1N5711
CR16 1N5711
C42 10uF 50V
~850 Hz
R49 4.7K
R50 2.87K 1%
U12 ICM7555CD
C45 .1
C46 .1
C47 .1
TP7 NOT USED
C51 10uF 50V
C52 10uF 50V
PS - 14.3 V
PS +10V
PS +10Vdc
R230 10K
ELEVATED_VOLTAGE_AT_MUX
R231 1K
R154 220
R155 4.7K
Q18 2N3904
C116 10uF 50V
VR2 1N4733A 5.1V
C117 10uF 50V
PS+4.4 Vdc
HIGH POWER SUPPLY VOLTAGE
R209 1M
U50 LT1719CS8
+5Vdigital
High = Fault; Low = OK
Power Supply High Fault (Page 1)
Power Supply High Fault Latch (Page 1)
C148 1 UF
C149 .01
U37 SN74HC109D
VCC_HIGH_FAULT_RESET
VCC_LOW_FAULT_RESET
C147 .1
R67 20K
+7V
CR55 1N914
Power Supply at MUX (Supply Vdc / 14.3)
R52 1.5K
C57 .1
R210 1M
U51 LT1719CS8
Power Supply Low Fault (Page 1)
Power Supply Low Fault Latch (Page 1)
C150 1 UF
C151 .01
U36 DS1867
+5Vdigital
C171 .1
+5Vanalog
5_DATA_OUT_4
5_CLOCK
5_POT_E_5
+5Vanalog
TEMP SENSOR 1
R89 10K
TEMP 1 - HIGH
Flange Temperature at MUX
C60 100pF
TEMP 1 - LOW
+5Vanalog
R93 10K
TEMP 2 - HIGH
Heat Sink Temperature at MUX
C61 100pF
TEMP 2 - LOW
DISABLE SUPPLY - MICRO (High Equals Supply Off Page 1)
CR62 BAL99
Power Supply High Fault Latch (High Equals Fault Page 1 & 2)
CR63 BAL99
Power Supply Low Fault Latch (High Equals Fault Page 1 & 2)
CR64 BAL99
ICC Over Current Fault Latch (High Equals Fault Page 1 & 4)
CR65 BAL99
Reflected Power Fault Latch (High Equals Fault Page 1 & 5)
CR66 BAL99
Over Dove Fault Latch (High Equals Fault Page 1 & 5)
CR67 BAL99
R92 100K
Q13 2N7002LT1
DRIVE_LEVEL_SET
Q19 2N7002LT1
PS +10Vdc
R72 10K
R78 10K
Q8 2N3906
R81 100K
R87 6.8K
Q9 2N7002LT1
R88 100
PS - 14.3 V
CR31 1N914
TP14 NOT USED
TP15 NOT USED
HIGH POWER FET GATE CONTROL
Axcera
REV ECO DATE APV
TITLE SCH, AMP MODULE CONTROL BD., HX (1306830)
DWN REH 12/16/05
CHK REH 1/6/06
ENGR REH 1/6/06
DWG. NO. 1306831
SIZE D0
SHEET 2 OF 5

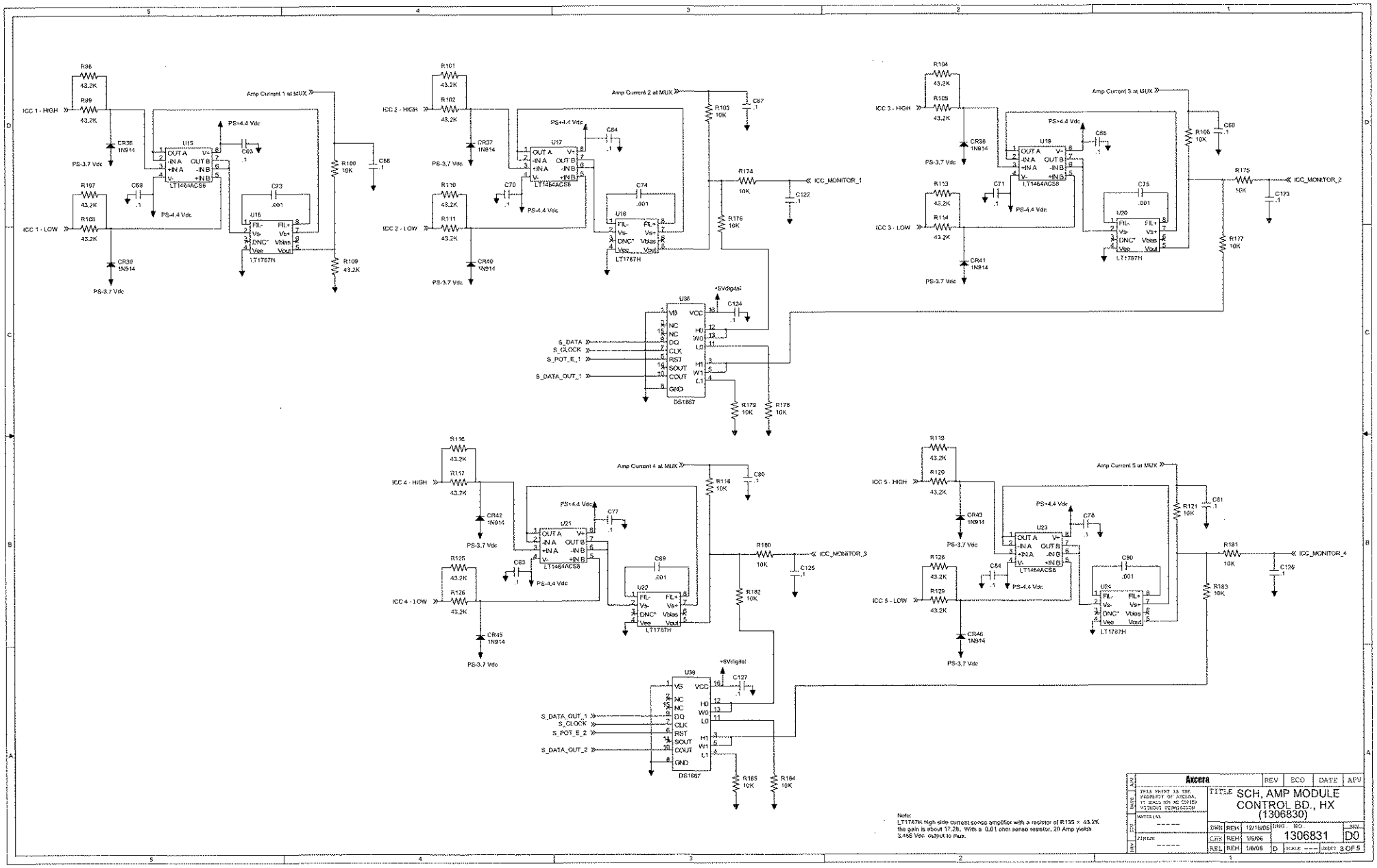
ICC 1 - HIGH
ICC 1 - LOW
Amp Current 1 at MUX
ICC 2 - HIGH
ICC 2 - LOW
Amp Current 2 at MUX
ICC 3 - HIGH
ICC 3 - LOW
Amp Current 3 at MUX
ICC 4 - HIGH
ICC 4 - LOW
Amp Current 4 at MUX
ICC 5 - HIGH
ICC 5 - LOW
Amp Current 5 at MUX
ICC_MONITOR_1
ICC_MONITOR_2
ICC_MONITOR_3
ICC_MONITOR_4
PS+4.4 Vdc
PS-4.4 Vdc
PS-3.7 Vdc
+5Vdigital
S_DATA
S_CLOCK
S_POT_E_1
S_DATA_OUT_1
S_POT_E_2
S_DATA_OUT_2
LT1464ACS8
LT1787H
DS1867
Note:
LT1787H high side current sense amplifier with a resistor of R135 = 43.2K
the gain is about 17.28. With a 0.01 ohm sense resistor, 20 Amp yields
3.456 Vdc output to mux.
Axcera
REV
ECO
DATE
APV
THIS PRINT IS THE PROPERTY OF AXCERA, IT SHALL NOT BE COPIED WITHOUT PERMISSION
TITLE
SCH, AMP MODULE CONTROL BD., HX (1306830)
MATERIAL
FINISH
DWN REH 12/16/05
CHK REH 1/5/06
REL REH 1/6/06
DWG. NO. 1306831
REV. D0
SCALE ---
SHEET 3 OF 5

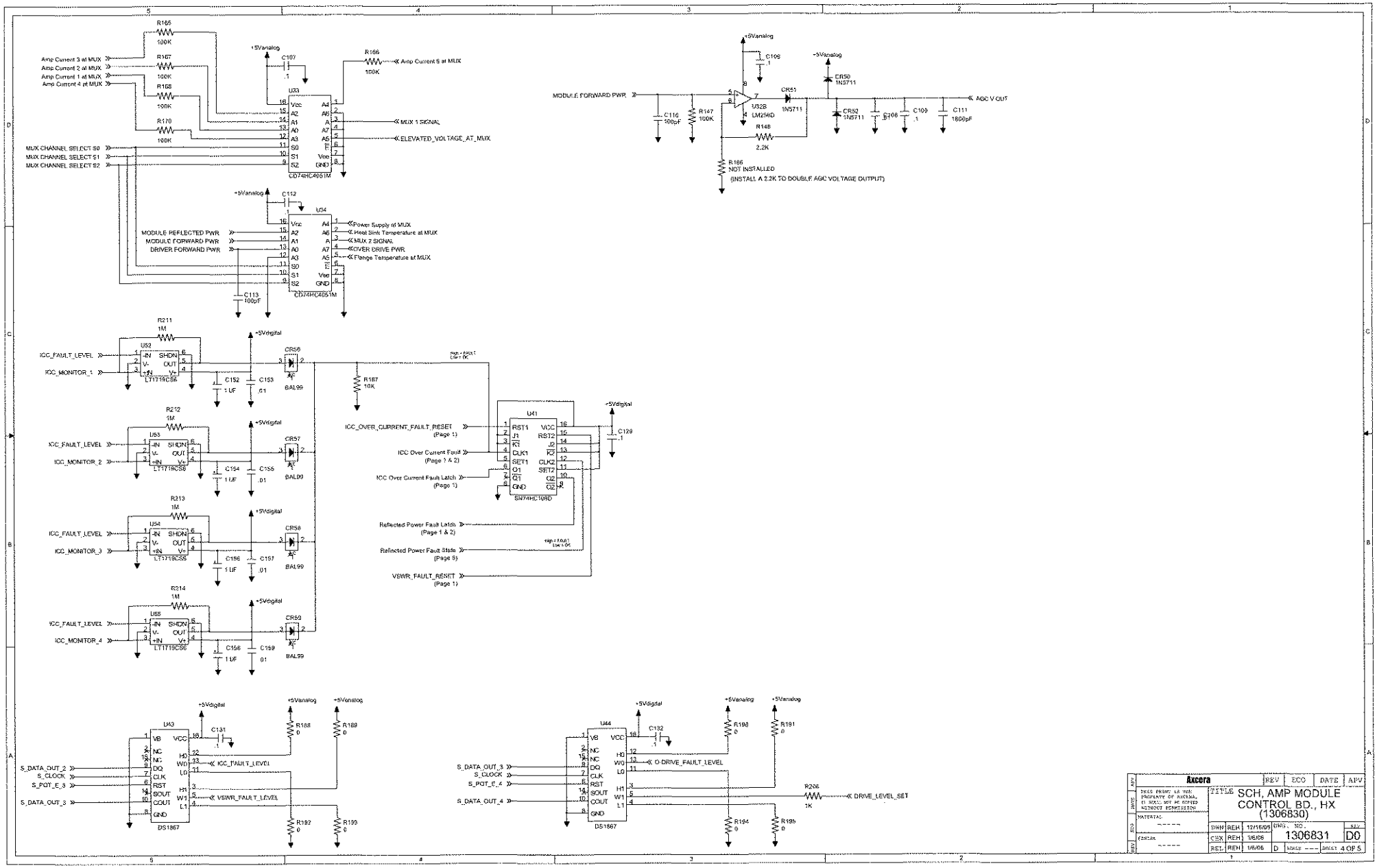
R165 100K
R167 100K
R168 100K
R170 100K
Amp Current 3 at MUX
Amp Current 2 at MUX
Amp Current 1 at MUX
Amp Current 4 at MUX
+5Vanalog
C107 .1
R166 100K
Amp Current 5 at MUX
U33
CD74HC4051M
MUX 1 SIGNAL
ELEVATED_VOLTAGE_AT_MUX
MUX CHANNEL SELECT S0
MUX CHANNEL SELECT S1
MUX CHANNEL SELECT S2
C112
U34
MODULE REFLECTED PWR
MODULE FORWARD PWR
DRIVER FORWARD PWR
Power Supply at MUX
Heat Sink Temperature at MUX
MUX 2 SIGNAL
OVER DRIVE PWR
Flange Temperature at MUX
C113 100pF
MODULE FORWARD PWR
C116 500pF
R147 100K
U32B LM258D
CR51 1N5711
CR50 1N5711
CR52 1N5711
R148 2.2K
R166 NOT INSTALLED
(INSTALL A 2.2K TO DOUBLE AGC VOLTAGE OUTPUT)
C108 .01
C109 .1
C111 1800pF
AGC V OUT
R211 1M
U52 LT1719CS6
ICC_FAULT_LEVEL
ICC_MONITOR_1
+5Vdigital
CR56 BAL99
C152 1 UF
C153 .01
R187 10K
R212 1M
U53
ICC_MONITOR_2
CR57
C154
C155
R213 1M
U54
ICC_MONITOR_3
CR58
C156
C157
R214 1M
U55
ICC_MONITOR_4
CR59
C158
C159
U41 SN74HC109D
ICC_OVER_CURRENT_FAULT_RESET (Page 1)
ICC Over Current Fault (Page 1 & 2)
ICC Over Current Fault Latch (Page 1)
Reflected Power Fault Latch (Page 1 & 2)
Reflected Power Fault State (Page 8)
VSWR_FAULT_RESET (Page 1)
C129 .1
U43 DS1867
C131 .1
R188 0
R189 0
ICC_FAULT_LEVEL
VSWR_FAULT_LEVEL
S_DATA_OUT_2
S_CLOCK
S_POT_E_3
S_DATA_OUT_3
R192 0
R193 0
U44 DS1867
C132 .1
R190 0
R191 0
O DRIVE_FAULT_LEVEL
S_DATA_OUT_3
S_CLOCK
S_POT_E_4
S_DATA_OUT_4
R206 1K
DRIVE_LEVEL_SET
R194 0
R195 0
Axcera
REV ECO DATE APV
TITLE SCH, AMP MODULE CONTROL BD., HX (1306830)
MATERIAL ----
FINISH ----
DWN REH 12/15/05
CHK REH 1/6/06
REL REH 1/6/06
DWG. NO. 1306831
REV D0
SCALE ---
SHEET 4 OF 5

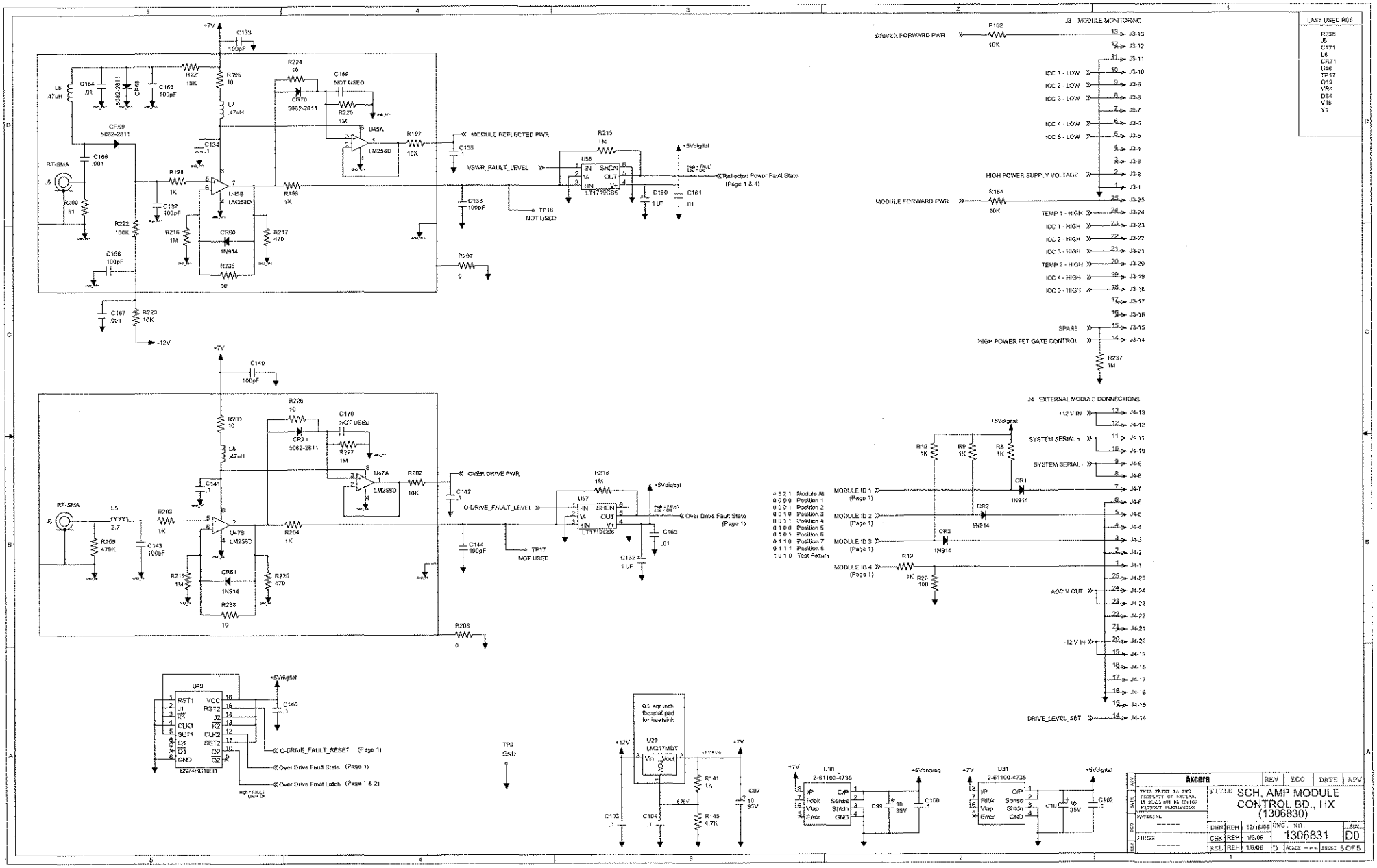
LAST USED REF
R238
J6
C171
L8
CR71
U56
TP17
Q19
VR4
DS4
V18
Y1
J3 MODULE MONITORING
DRIVER FORWARD PWR
R162 10K
ICC 1 - LOW
ICC 2 - LOW
ICC 3 - LOW
ICC 4 - LOW
ICC 5 - LOW
HIGH POWER SUPPLY VOLTAGE
MODULE FORWARD PWR
R164 10K
TEMP 1 - HIGH
ICC 1 - HIGH
ICC 2 - HIGH
ICC 3 - HIGH
TEMP 2 - HIGH
ICC 4 - HIGH
ICC 5 - HIGH
SPARE
HIGH POWER FET GATE CONTROL
R237 1M
J4 EXTERNAL MODULE CONNECTIONS
+12 V IN
SYSTEM SERIAL +
SYSTEM SERIAL -
MODULE ID 1 (Page 1)
MODULE ID 2 (Page 1)
MODULE ID 3 (Page 1)
MODULE ID 4 (Page 1)
AGC V OUT
-12 V IN
DRIVE_LEVEL_SET
MODULE REFLECTED PWR
VSWR_FAULT_LEVEL
Reflected Power Fault State (Page 1 & 4)
TP16 NOT USED
OVER DRIVE PWR
O-DRIVE_FAULT_LEVEL
Over Drive Fault State (Page 1)
TP17 NOT USED
O-DRIVE_FAULT_RESET (Page 1)
Over Drive Fault State (Page 1)
Over Drive Fault Latch (Page 1 & 2)
TP9 GND
0.5 sqr inch thermal pad for heatsink
U29 LM317MDT
U30 2-61100-4735
U31 2-61100-4735
Axcera
SCH, AMP MODULE CONTROL BD., HX (1306830)
1306831
D0
SHEET 5 OF 5

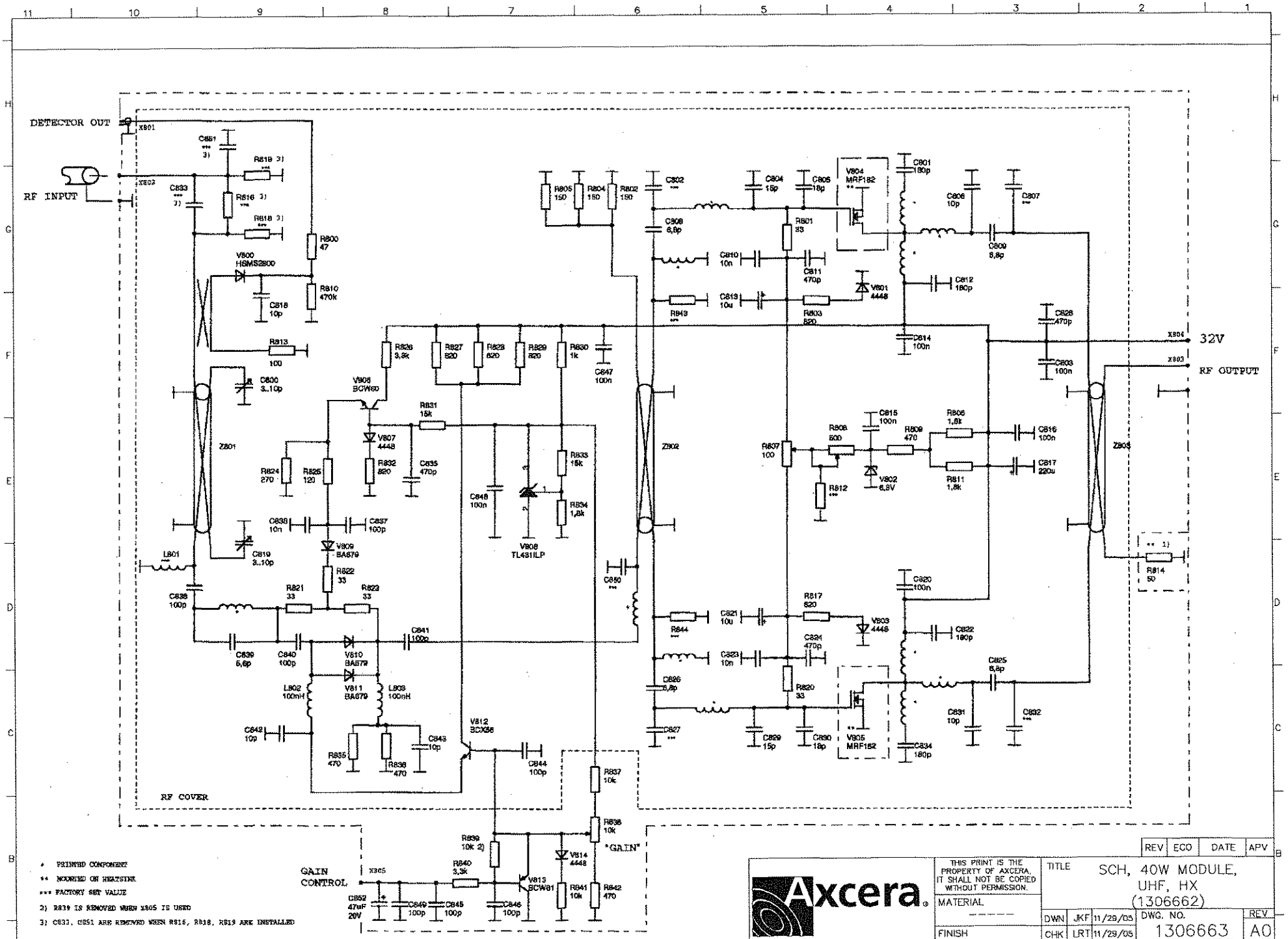
DETECTOR OUT
RF INPUT
RF COVER
GAIN CONTROL
GAIN
32V
RF OUTPUT
Z801
Z802
Z803
V800 HSMS2800
V801 4448
V802 6,8V
V803 4448
V804 MRF182
V805 MRF182
V806 BCW60
V807 4448
V808 TL431ILP
V809 BA679
V810 BA679
V811 BA679
V812 BCX56
V813 BCW61
V814 4448
L801
L802 100nH
L803 100nH
R814 50
C814 100n
C803 100n
C828 470p
C817 220u
C816 100n
C815 100n
C820 100n
C822 180p
C834 180p
C831 10p
C832 ***
C825 6,8p
C826 6,8p
C827 ***
C829 15p
C830 18p
C821 10u
C823 10n
C824 470p
C844 100p
C837 100p
C838 100p
C839 10n
C840 100p
C841 100p
C842 10p
C843 10p
C819 3..10p
C800 3..10p
C818 10p
C835 470p
C836 100p
C839 5,6p
C847 100n
C848 100n
C850 ***
C852 47uF 20V
C849 100p
C845 100p
C846 100p
C801 180p
C806 10p
C807 ***
C809 6,8p
C812 180p
C808 6,8p
C810 10n
C811 470p
C813 10u
C802 ***
C804 15p
C805 18p
R801 33
R803 820
R843 ***
R844 ***
R817 820
R820 33
R806 1,5k
R811 1,8k
R809 470
R808 500
R812 ***
R807 100
R805 150
R804 150
R802 150
R826 3,9k
R827 820
R828 820
R829 820
R830 1k
R831 15k
R832 820
R833 15k
R834 1,8k
R824 270
R825 120
R822 33
R821 33
R823 33
R813 100
R810 470k
R800 47
R816 3)
R819 3)
R818 3)
R833 3)
R839 10k 2)
R840 3,3k
R837 10k
R838 10k
R841 10k
R842 470
R835 470
R836 470
X801
X802
X803
X804
X805
X806
X807
X808
X809
X810
X811
X812
X813
X814
X815
X816
X817
X818
X819
X820
X821
X822
X823
X824
X825
X826
X827
X828
X829
X830
X831
X832
X833
X834
X835
X836
X837
X838
X839
X840

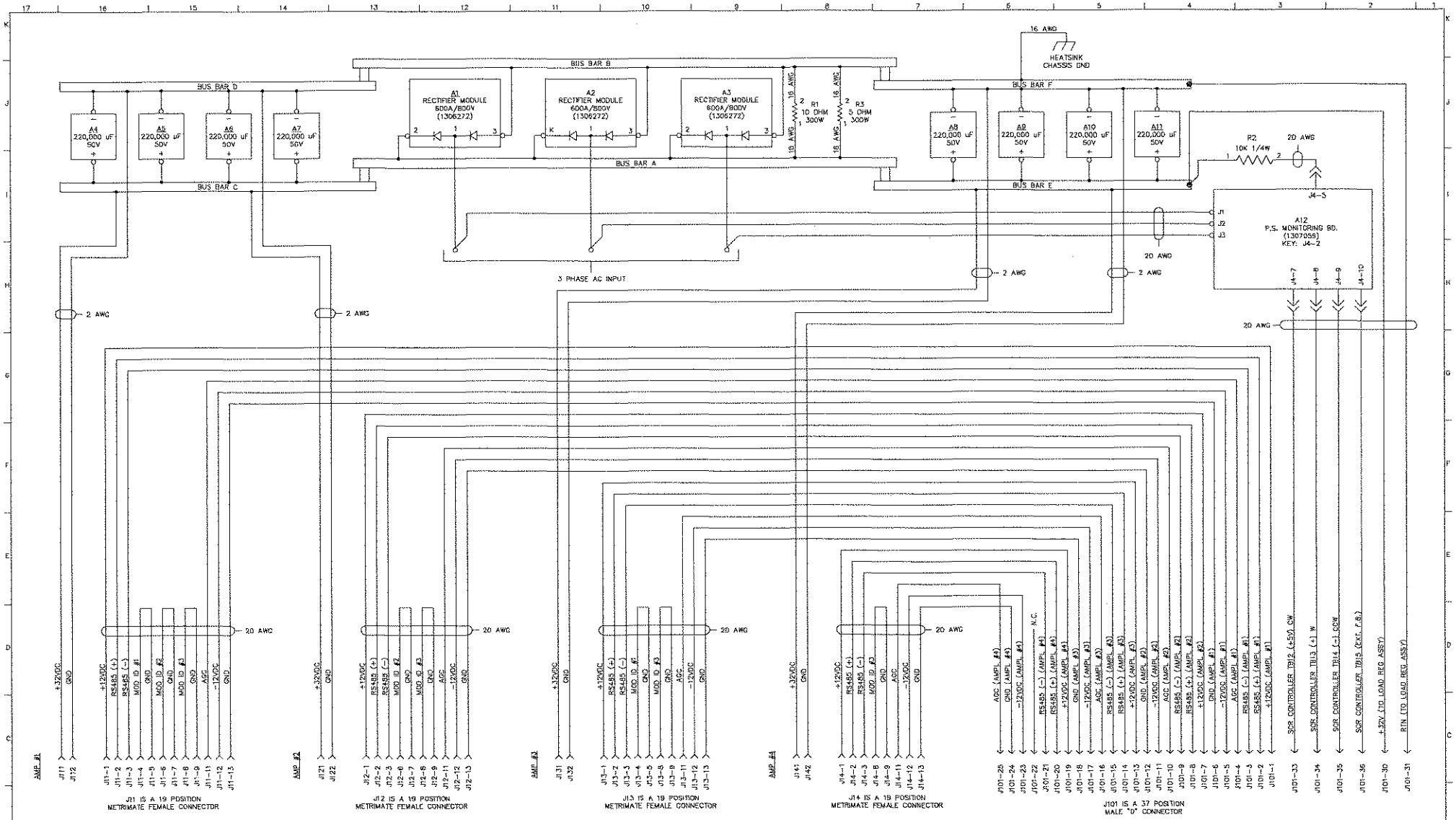

REV	ECO	DATE	APV

WIRE AT BUS BAR "F" GND WAS 2 AWG, WIRE AT PH B TO WIRE 2 AWG BUSS BAR A WAS BUSS BAR 3. WB 09/20/04 JCM

ADDED R3, ADDED CONNECTIONS TO WIRES A10 - 30/31 AND +/- BUSSAR. WB 09/20/04 JCM

ADDED R2 AT A12. ADDED WIRES AT J101-4 AND J4-5. WIRE FROM A12-J4 -7 TO J101-33 WAS FROM A12-J4 -10 TO J101-33. A12 WAS 1306578. WB 09/20/04 JCM

Axcera.

THIS PRINT IS THE PROPERTY OF AXCERA. IT SHALL NOT BE COPIED WITHOUT PERMISSION.

MATERIAL ——

FINISH ——

TITLE I/C, LINEAR P. S. UHF, +32V TOP, INNOVATOR HX

DWN	RGE	09/12/05	
CHK	JCM	01/29/05	
REL	JCM	01/29/05	D

DWG. NO. 1306331 REV. D0

SCALE --- SHEET 1 OF 1

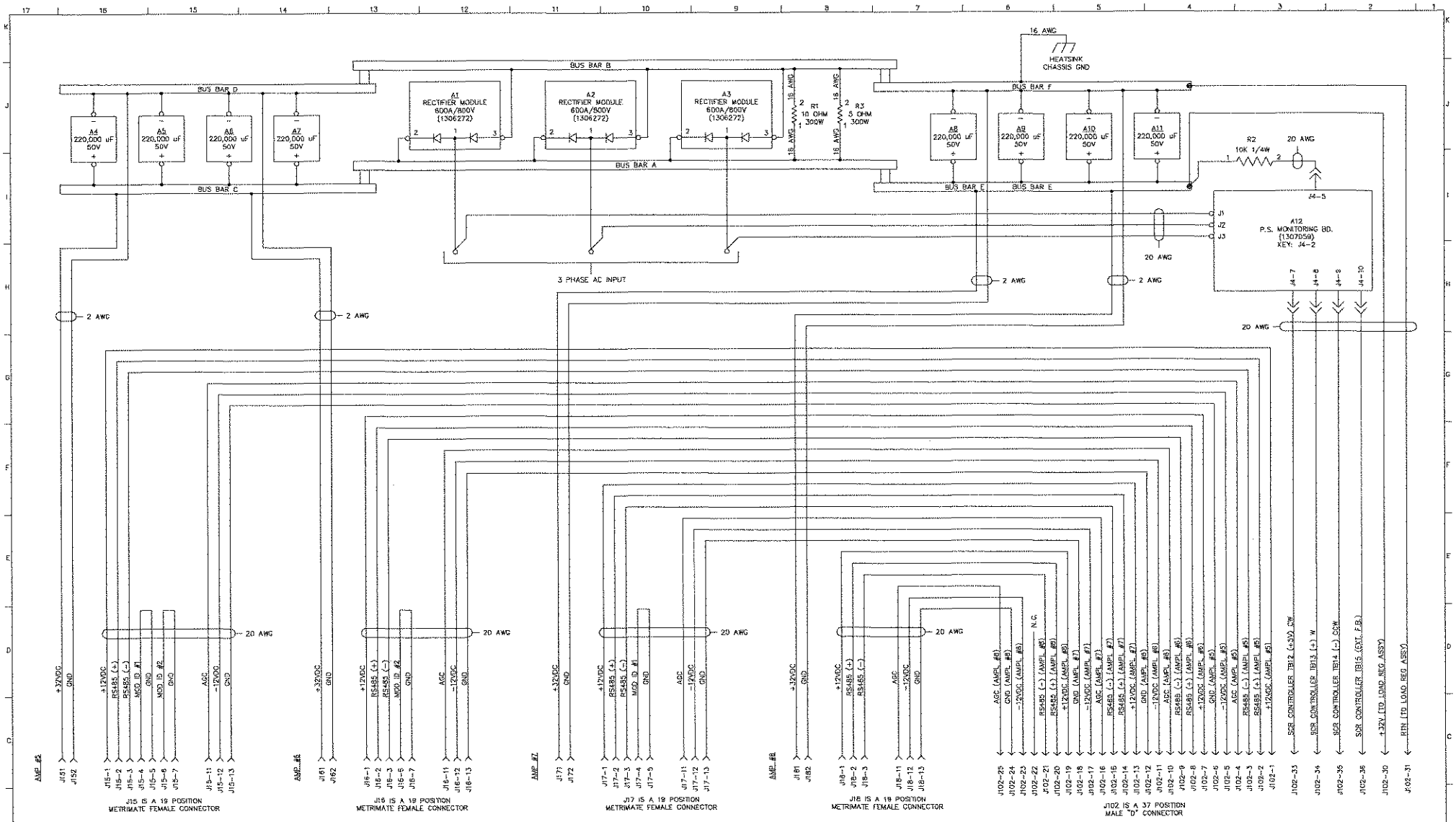

REV	ECO	DATE	APV
D	WIRE AT BUS BAR "+" GND WAS 2 AWG, WIRE AT R1 & R3 WAS 2 AWG. BUSS BAR 4 WAS BUSS BAR 3. WB	06/12/05	JCM
C	ADDED R3. ADDED CONNECTIONS BETWEEN J102 TO 20 AWG "+/-" BUSBAR. WB	12/3/04	JCM
B	ADDED R2 AT A12. ADDED WIRES AT A12 TO BUSBAR. WIRE FROM A12-4 TO J102-33 WAS FROM A12-J4-7 TO J102-33. A12 WAS 1306278. WB	12/3/04	JCM
A			

THIS PRINT IS THE PROPERTY OF AXCERA, IT SHALL NOT BE COPIED WITHOUT PERMISSION.

MATERIAL ------

FINISH ------

Axcera.

TITLE: I/C, LINEAR P. S. UHF, +32V BOTTOM, INNOVATOR HX

DWN	RGE	06/12/05
CHK	JCM	12/3/05
REL	JCM	12/3/05

DWG. NO. 1306332 REV D0

SCALE --- SHEET 1 OF 1

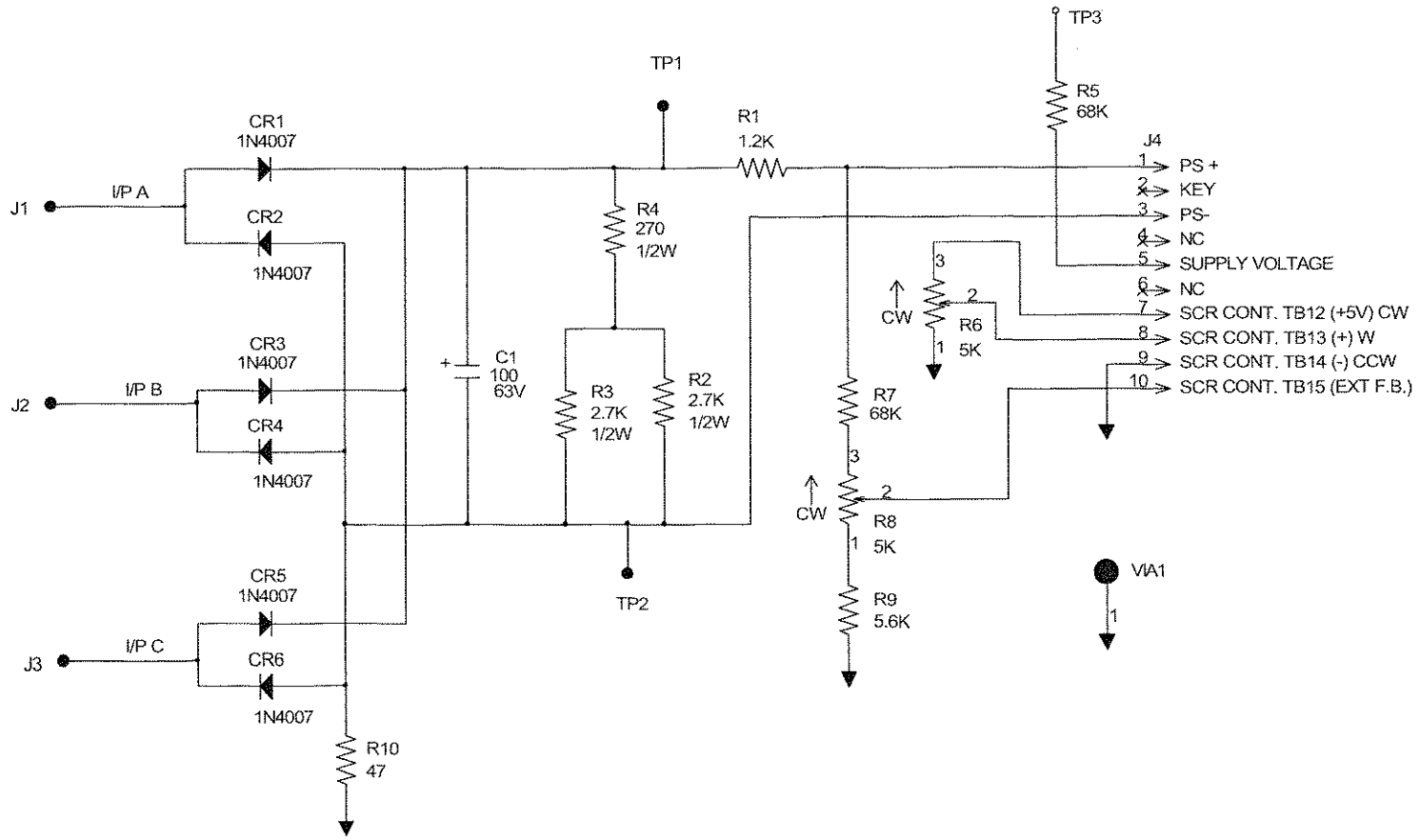

LAST USED REF
TP3
CR6
R10
J4
C1
VIA1

No Ground plane or copper pour on the PCB.

NOTE:

1) ALL RESISTORS ARE 1/8W UNLESS OTHERWISE NOTED.
2) ALL CAPACITORS ARE IN uF UNLESS OTHERWISE NOTED.
3) ALL INDUCTORS ARE IN uH UNLESS OTHERWISE NOTED.

REV	ECO	DATE	APV
B0	20112066	3/7/06	JCM

C1 WAS 50V. JKF

Axcera

THIS PRINT IS THE PROPERTY OF AXCERA, IT SHALL NOT BE COPIED WITHOUT PERMISSION

MATERIAL ------

FINISH ------

TITLE SCH., POWER SUPPLY MONITORING BD., HX (1307059)

DWN	JKF	2/16/06	DWG. NO. 1307060
CHK	REH	2/16/06	REV B0
REL	REH	2/16/06	B SCALE --- SHEET 1 OF 1