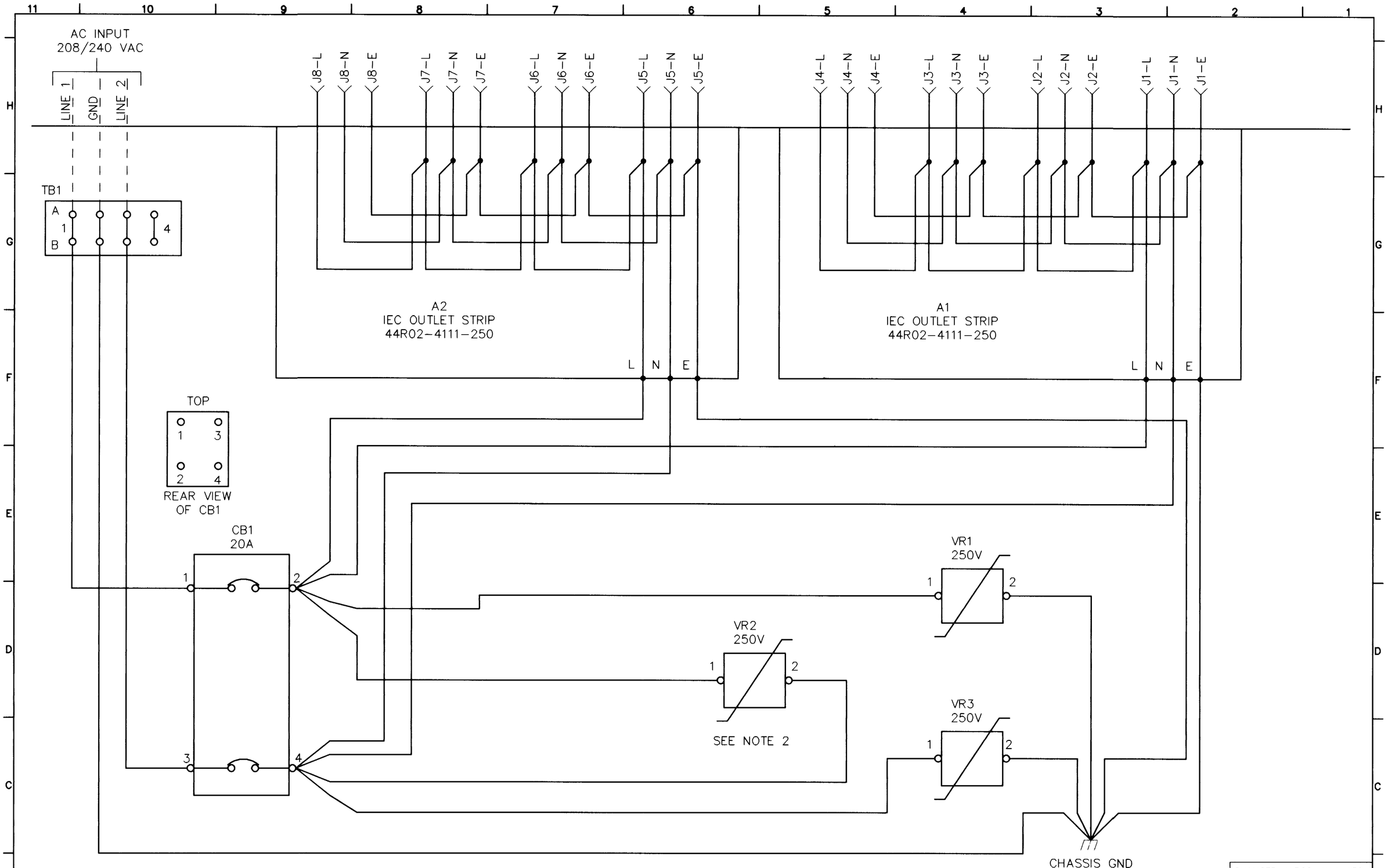

NOTES:

1) ALL WIRE IS 12 AWG UNLESS NOTED OTHERWISE.
2) VR2 REQUIRES A MOV INSULATOR KIT.
3) LINE 2 IS THE NEUTRAL FOR INTERNATIONAL SYSTEMS USING 220 VAC HOT AND NEUTRAL.

REV	ECN	DATE	APV
1	9250	12/31/97	RE

CHANGED 44R02-4111-150 TO 44R02-4111-250. (RFB)

ITS CORPORATION

THIS PRINT IS THE PROPERTY OF ITS CORP. IT SHALL NOT BE COPIED WITHOUT PERMISSION.

MATERIAL ---

FINISH ---

TITLE: AC DISTRIBUTION ASSY, EXC. CAB. (1245-1500)

DWN	TMY	5/28/96	DWG. NO. 1245-8500
CHK	RE	5/28/96	REV 1
REL	RE	5/29/96	C SCALE 1=1 SHEET 1 OF 1

Wed Dec 31 10:07:08 1997