NOTE: TP1 & TP2 ARE PROVIDED FOR FUNCTION TEST PURPOSES ONLY, AND ARE ACCOMPLISHED BY ADDING VIA HOLE TO TOP OF PCB.

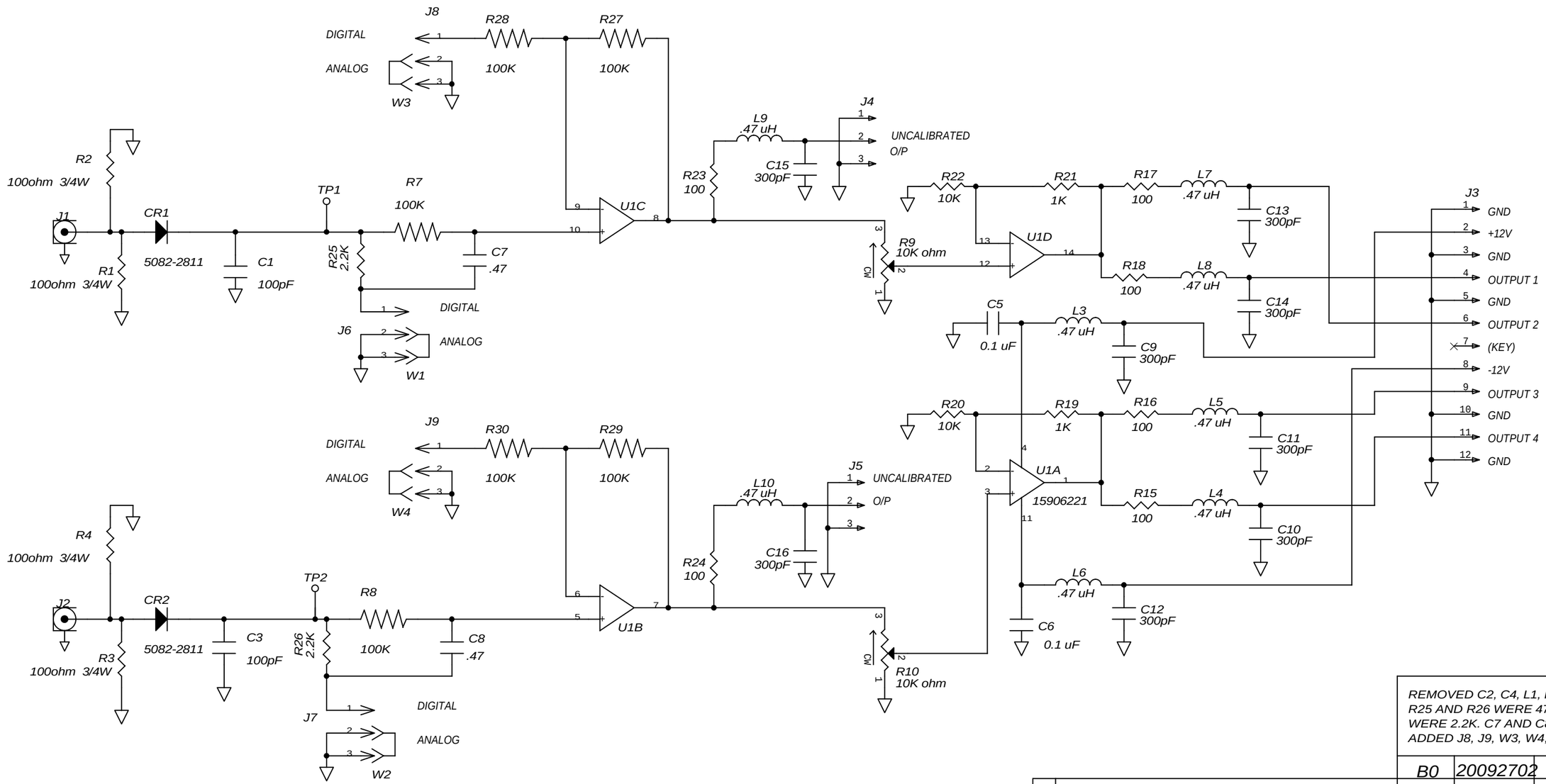

REMOVED C2, C4, L1, L2, CR3, AND CR4. R25 AND R26 WERE 470K. R7 AND R8 WERE 2.2K. C7 AND C8 WERE .001. ADDED J8, J9, W3, W4, R27-R30. (PJK)

REV	ECO	DATE	APV
B0	20092702	6/11/01	LRT

ADC Telecommunications

THIS PRINT IS THE PROPERTY OF ADC, IT SHALL NOT BE COPIED WITHOUT PERMISSION

MATERIAL ----

FINISH ----

TITLE **91-00-00-50B-61**
DUAL PEAK DETECTOR, SMT (1159965)

DWN	PJK	2/23/00	DWG. NO. 1159976	REV B0
CHK	LRT	2/26/01		
REL	LRT	2/26/01	B SCALE - - -	SHEET 1 OF 1