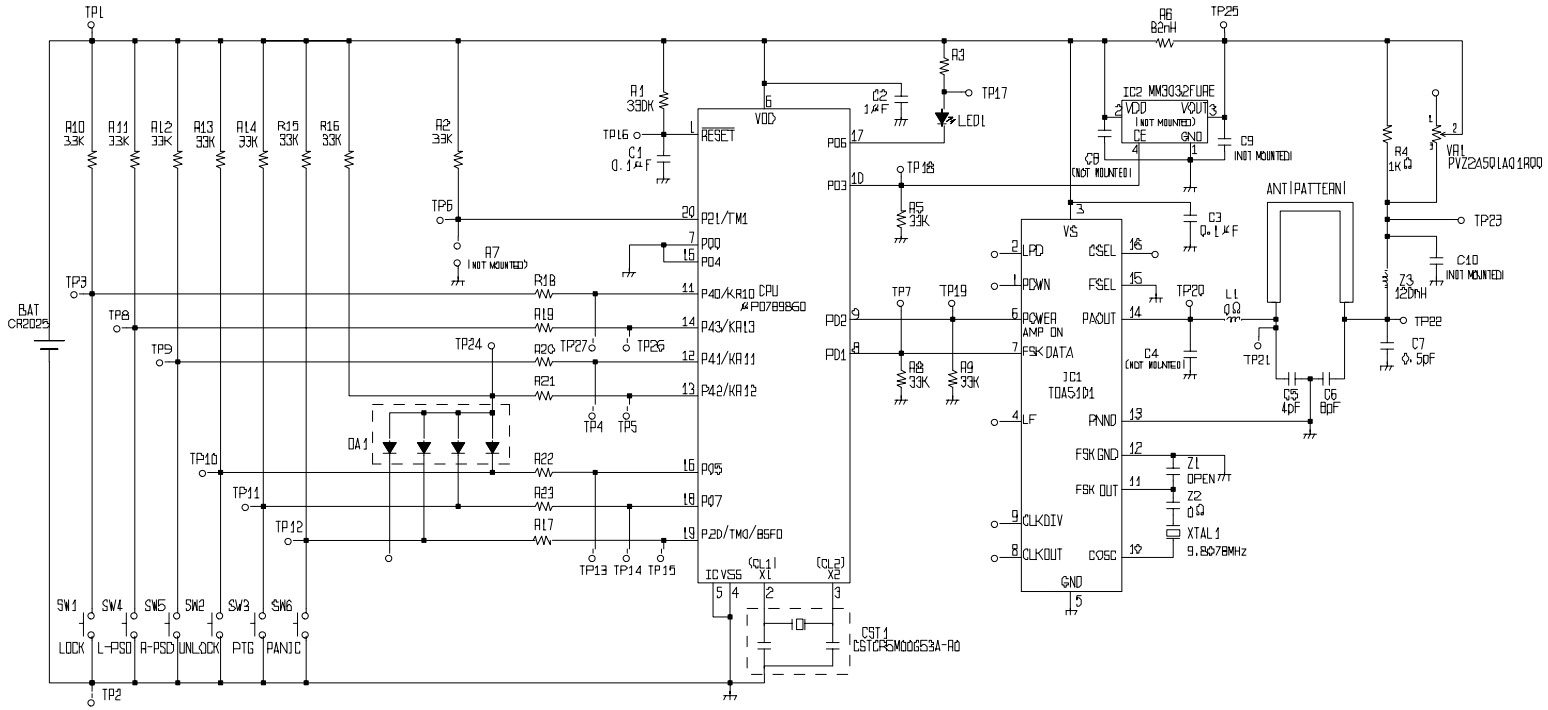
TP1
TP2
BAT
CR2025
R10 33K
R11 33K
R12 33K
R13 33K
R14 33K
R15 33K
R16 33K
R2 33K
R1 330K
TP16
C1 0.1μF
TP6
A7 (NOT MOUNTED)
TP3
TP8
TP9
R18
R19
R20
R21
TP24
TP27
TP26
TP4
TP5
DA1
TP10
TP11
TP12
R22
R23
R17
TP13
TP14
TP15
SW1
SW4
SW5
SW2
SW3
SW6
LOCK
L-PSD
A-PSD
UNLOCK
PTG
PANIC
RESET
VDD
P21/TM1
P00
P04
P40/KR10
P43/KR13
P41/KR11
P42/KR12
P05
P07
P20/TMO/BSFO
IC VSS
(CL1) X1
(CL2) X2
CPU μPD78988GD
C2 1μF
P06
P03
P02
P01
TP17
LED1
R3
TP18
R5 33K
TP7
TP19
R8 33K
R9 33K
CST1
CSTCR5M00G53A-R0
R6 82nH
TP25
IC2 MM3032FURE
VDD
VOUT
CE
GND
(NOT MOUNTED)
C9 (NOT MOUNTED)
C8 (NOT MOUNTED)
C3 0.1μF
VS
LPD
PDWN
POWER AMP ON
FSK DATA
LF
CLKDIV
CLKOUT
GND
CSEL
FSEL
PAOUT
PNND
FSK GND
FSK OUT
COSC
IC1 TDA5101
TP20
L1 0Ω
C4 (NOT MOUNTED)
Z1 OPEN
Z2 0Ω
XTAL1 9.8078MHz
ANT (PATTERN)
TP21
C5 4pF
C6 8pF
R4 1kΩ
VR1 PVZ2A50LA01R00
TP23
C10 (NOT MOUNTED)
Z3 120nH
TP22
C7 0.5pF