6. PCB

6.1 Circuit diagram

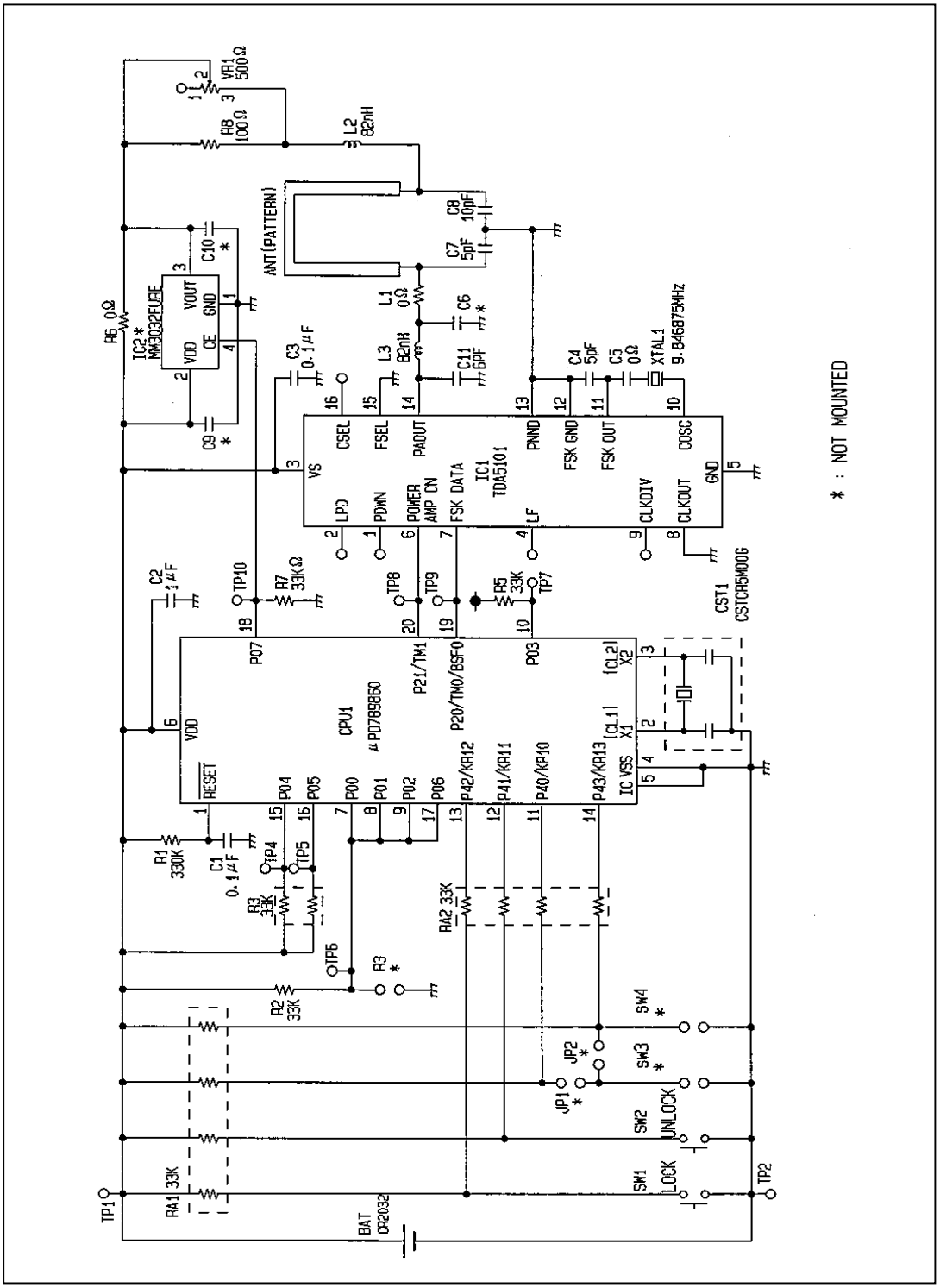

Figure 6.1.1 Circuit diagrams

-