REVISION		ECN No.	Dwn.	Appr.	Date
A		105174, NEW DWG.	DM		

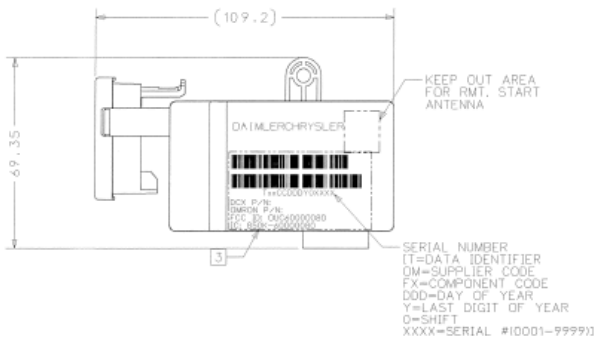

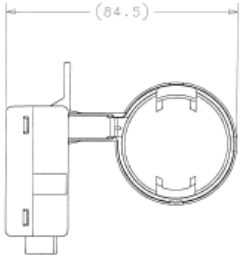

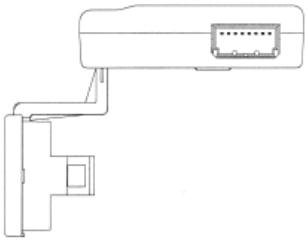

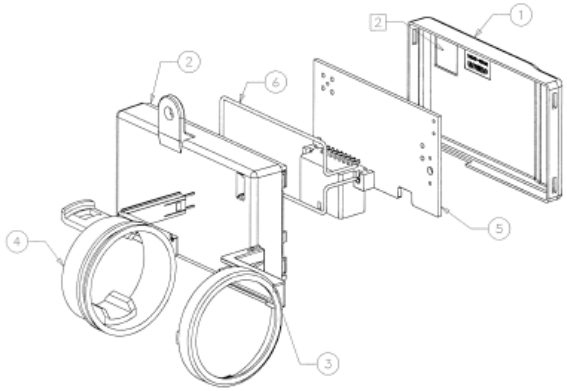

SPECIFICATION LIST	
Z9120033-	SCHEMATIC WCM
Z9220086-	PACKAGING WCM
Z9070029-0	INSPECTION WCM
Z9270019-0	SOFTWARE

-5	FCC ID: OUC60000365 IC: 850K-60000365

NOTES:
1. COIL ASSEMBLY MUST BE FULLY SEATED TO THE CASE.
2. REMOTE START VERSION(-5) WILL HAVE PLASTIC PUNCHED OUT IN THIS LOCATION
3. IF UNIT PASSES ALL TESTS, LASER MARK AS SHOWN.
4. THIS PRODUCT IS TO USE LEAD-FREE SOLDER.

ITEM	PART NO.	DESCRIPTION	QTY. D7520023-5	D7520023-4	D7520023-3	D7520023-2	D7520023-1	D7520023-0
6	D1190002-0	WIRE,1005 STEEL Ø 1.2mm		1.8		1.8	1.8	1.8
	Z9020021-0	SPEC., WIRE ANTENNA						
5	D6000036-5	SUBASSEMBLY, PCB	1					
5	D6000036-4	SUBASSEMBLY, PCB		1				
5	D6000036-3	SUBASSEMBLY, PCB			1			
5	D6000036-2	SUBASSEMBLY, PCB				1		
5	D6000036-1	SUBASSEMBLY, PCB					1	
5	D6000036-0	SUBASSEMBLY, PCB						1
4	D4970067-0	COIL				1		
4	D6200033-0	SUBASSEMBLY, COIL	1	1	1		1	1
3	D4970068-0	COIL COVER	1	1	1	1	1	1
2	D4970065-0	CASE	1	1	1	1	1	1
1	D4970066-0	COVER	1	1	1	1	1	1

THIRD ANGLE PROJECTION

SCALE: 1:1

UNLESS OTHERWISE SPECIFIED DIMENSIONS ARE IN MM.

TOLERANCES PER ITM:
0-2 mm ± 0.10
2-6 mm ± 0.05
6-12 mm ± 0.06
12-18 mm ± 0.08
18-30 mm ± 0.10
ANGLE ±0.5°
FINISH ± 0.1
DEBURRING ± 0.1

THIS DOCUMENT CONTAINS CONFIDENTIAL INFORMATION WHICH IS THE PROPERTY OF OMRON AUTOMOTIVE ELECTRONICS INC. AND MAY NOT BE REPRODUCED WITHOUT WRITTEN PERMISSION.

OMRON
AUTOMOTIVE ELECTRONICS INC.
3700 OHIO AVE., ST. CHARLES, IL 60174

COMPUTER GENERATED IN UG
NO MANUAL CHANGES

DWN. DM	DATE 11-18-04	TITLE FINAL ASSEMBLY WCM - JS
CHK.	DATE 11-30-05	
APP.	DATE 12-5-05	SIZE C DWG. NO. D7520023- REV A SHEET 1 of 1

PRINTED DOCUMENTS ARE UNCONTROLLED

REVISIONS					
Rev.	Mod.	ECN No.	Chg.	App.	Date
A		105174, NEW DWG.	DM		

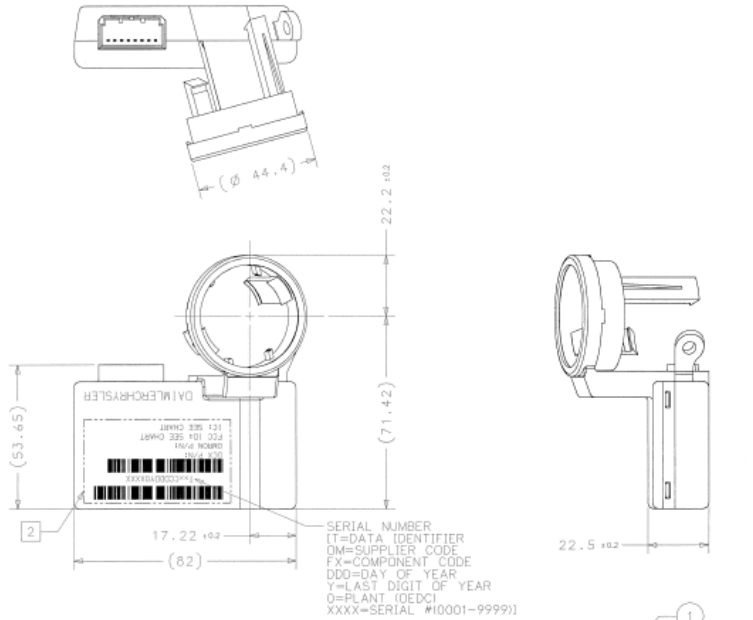

SPECIFICATION LIST	
Z9120033-	SCHEMATIC WCM
Z9220057-	PACKAGING WCM
Z9070029-0	INSPECTION WCM
Z9270019-0	SOFTWARE

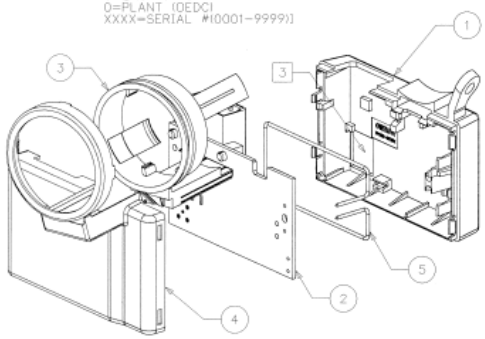

-5	FCC ID: OUC60000365 IC: 850K-60000365

ITEM	PART NO.	DESCRIPTION	QTY. D7520032-5	D7520032-4	D7520032-3	D7520032-2	D7520032-1	D7520032-0
5	D1190002-0 Z9020021-0	WIRE,1005 STEEL Ø 1.2mm SPEC., WIRE ANTENNA		1.8		1.8	1.8	1.8
4	D6000036-5	SUBASSEMBLY, PCB	1					
4	D6000036-4	SUBASSEMBLY, PCB		1				
4	D6000036-3	SUBASSEMBLY, PCB			1			
4	D6000036-2	SUBASSEMBLY, PCB				1		
4	D6000036-1	SUBASSEMBLY, PCB					1	
4	D6000036-0	SUBASSEMBLY, PCB						1
3	D6200024-0	SUBASSEMBLY, COIL	1	1	1		1	1
3	D4970038-0	COIL				1		
2	D4970029-0	COVER	1	1	1	1	1	1
1	D4970028-0	CASE	1	1	1	1	1	1

NOTES:
1. COIL SUB-ASSEMBLY MUST BE FULLY SEATED TO THE CASE.
2. IF UNIT PASSES ALL TESTS, LASER MARK AS SHOWN.
3. IF D6000036-5 IS USED, A HOLE WILL BE PUNCHED INTO THE CASE TO ALLOW FOR THE FAKRA CONNECTOR.
4. THIS PRODUCT IS TO USE LEAD-FREE SOLDER.

PRINTED DOCUMENTS ARE UNCONTROLLED

THIRD ANGLE PROJECTION

SCALE: 1:1

UNLESS OTHERWISE SPECIFIED DIMENSIONS ARE IN mm.

TOLERANCES PER: IT14
0-3 mm ± 0.120
3-6 mm ± 0.15
6-10 mm ± 0.18
10-18 mm ± 0.215
18-30 mm ± 0.26
ABOVE 30mm ± 0.31
ANGLES ± 1°
CENTERING ± 0.07

THIS DOCUMENT CONTAINS PROPRIETARY INFORMATION WHICH IS THE PROPERTY OF OMRON AUTOMOTIVE ELECTRONICS INC.AND SHALL NOT BE REPRODUCED WITHOUT WRITTEN PERMISSION.

DWN. DM DATE 11-12-03
CHK. DATE 12-01-05
APP. DATE 12-8-05

OMRON
AUTOMOTIVE ELECTRONICS INC.
3700 OHIO AVE., ST. CHARLES, IL 60174

COMPUTER GENERATED IN UG
NO MANUAL CHANGES

TITLE
FINAL ASSEMBLY
WCM - PM/MK

SIZE C | DWG. NO. D7520032- | REV A | SHEET 1 of 1

REVISIONS					
MOD.	REV.	SEE ECN FOR DESCRIPTION DETAILS OF REVISION			
		ECN No.	Dsg.	Appr.	Date
A		105174, NEW DWG.	DM		

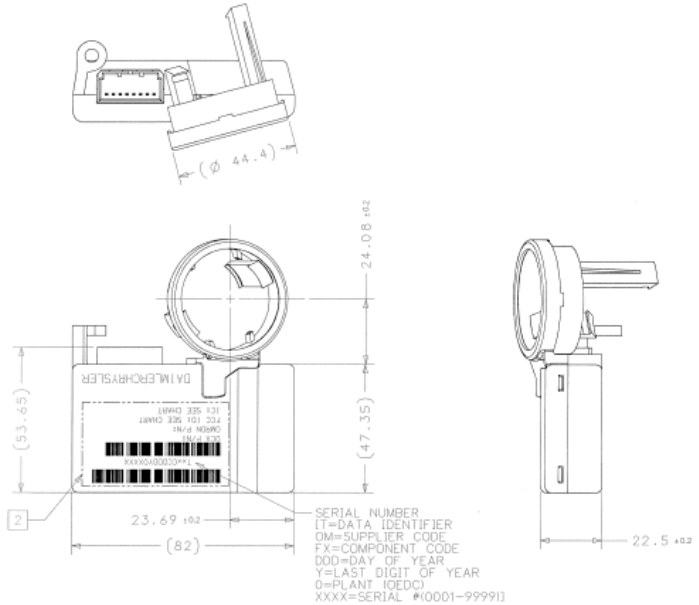

SPECIFICATION LIST	
Z9120033-	SCHEMATIC WCM
Z9220055-	PACKAGING WCM
Z9070029-0	INSPECTION WCM
Z9270019-0	SOFTWARE

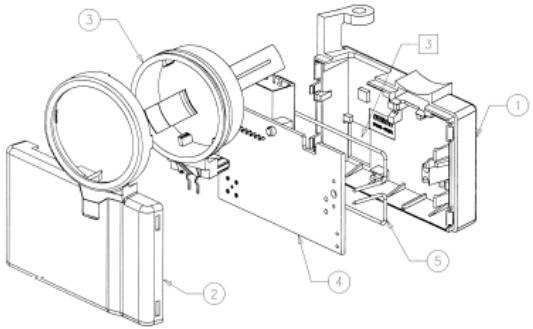

-5	FCC ID: OUC60000365 IC: 850K-60000365

ITEM	PART NO.	DESCRIPTION	QTY.				
			D7520031-5	D7520031-3	D7520031-2	D7520031-1	D7520031-0
S	D1190002-0	WIRE,1005 STEEL Ø 1.2mm			1.8	1.8	1.8
	Z9020021-0	SPEC., WIRE ANTENNA					
4	D6000036-4	SUBASSEMBLY, PCB	1				
4	D6000036-3	SUBASSEMBLY, PCB		1			
4	D6000036-2	SUBASSEMBLY, PCB			1		
4	D6000036-1	SUBASSEMBLY, PCB				1	
4	D6000036-0	SUBASSEMBLY, PCB					1
3	D6200023-0	SUBASSEMBLY, COIL	1	1		1	1
3	D4970030-0	COIL			1		
2	D4970027-0	COVER	1	1	1	1	1
1	D4970026-0	CASE	1	1	1	1	1

NOTES:
1. COIL SUB-ASSEMBLY MUST BE FULLY SEATED TO THE CASE.
2. IF UNIT PASSES ALL TESTS, LASER MARK AS SHOWN.
3. IF D6000036-5 IS USED, A HOLE WILL BE PUNCHED INTO THE CASE TO ALLOW FOR THE FAKRA CONNECTOR.
4. THIS PRODUCT IS TO USE LEAD-FREE SOLDER.

PRINTED DOCUMENTS ARE UNCONTROLLED

THIRD ANGLE PROJECTION

SCALE: 1:1

UNLESS OTHERWISE SPECIFIED DIMENSIONS ARE IN mm.

TOLERANCES PER JT14
3-1 mm ± 0.125
3-6 mm ± 0.15
6-10 mm ± 0.18
10-18 mm ± 0.215
18-30 mm ± 0.26
ABOVE 30mm ± 0.31
ANGLES ± 1°
CENTERING ± 0.07

THIS DOCUMENT CONTAINS CONFIDENTIAL INFORMATION WHICH IS THE PROPERTY OF OMRON AUTOMOTIVE ELECTRONICS INC. AND MAY NOT BE REPRODUCED WITHOUT WRITTEN PERMISSION.

DRN. DM DATE 05-17-05
CHK. DATE 8-30-05
APP. DATE

OMRON
AUTOMOTIVE ELECTRONICS INC.
2709 OHIO AVE., ST. CHARLES, IL 60174

COMPUTER GENERATED IN DG
NO MANUAL CHANGES

TITLE
FINAL ASSEMBLY
WCM - DR

SIZE C | DWG. NO. D7520031- | REV A | SHEET 1 of 1