Size: (Label) 43*23mm;

BLACK letters and Silver background
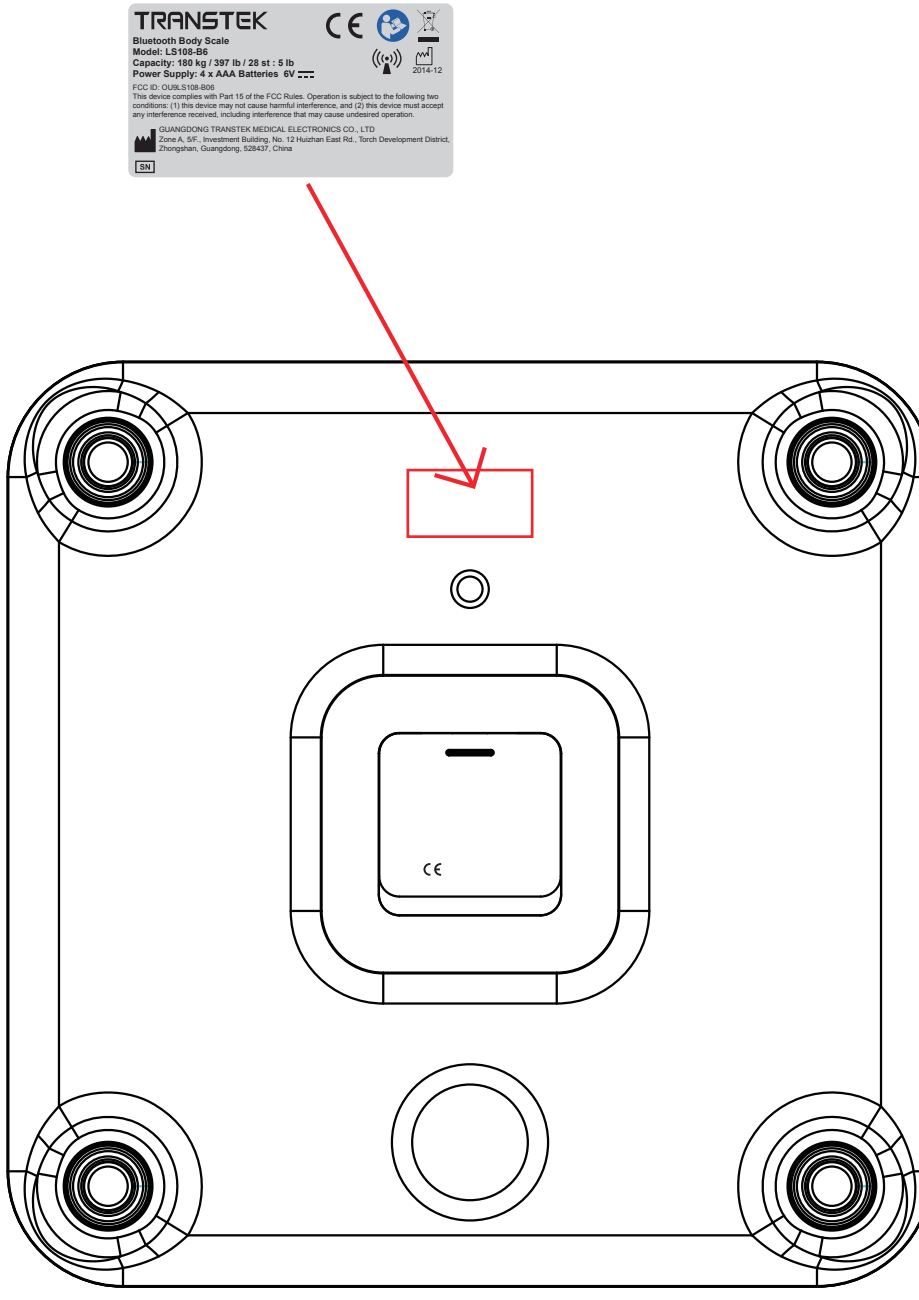
1 : 1