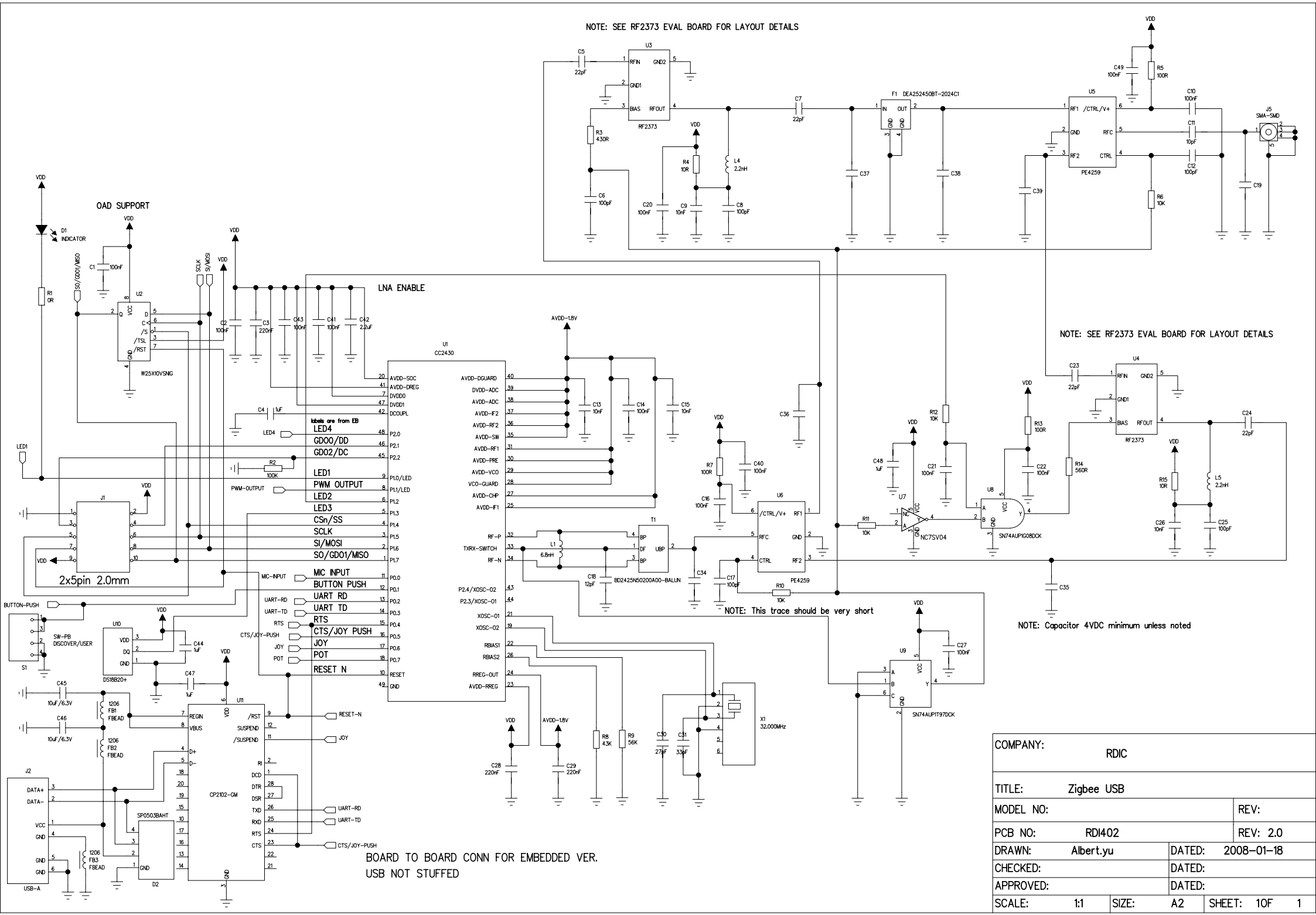

COMPANY:	RDIC		
TITLE:	Zigbee USB		
MODEL NO:			REV:
PCB NO:	RDI402		REV: 2.0
DRAWN:	Albert.yu	DATED:	2008-01-18
CHECKED:		DATED:	
APPROVED:		DATED:	
SCALE: 1:1	SIZE: A2	SHEET: 1OF 1	