PDF created with pdfFactory Pro trial version www.pdffactory.com

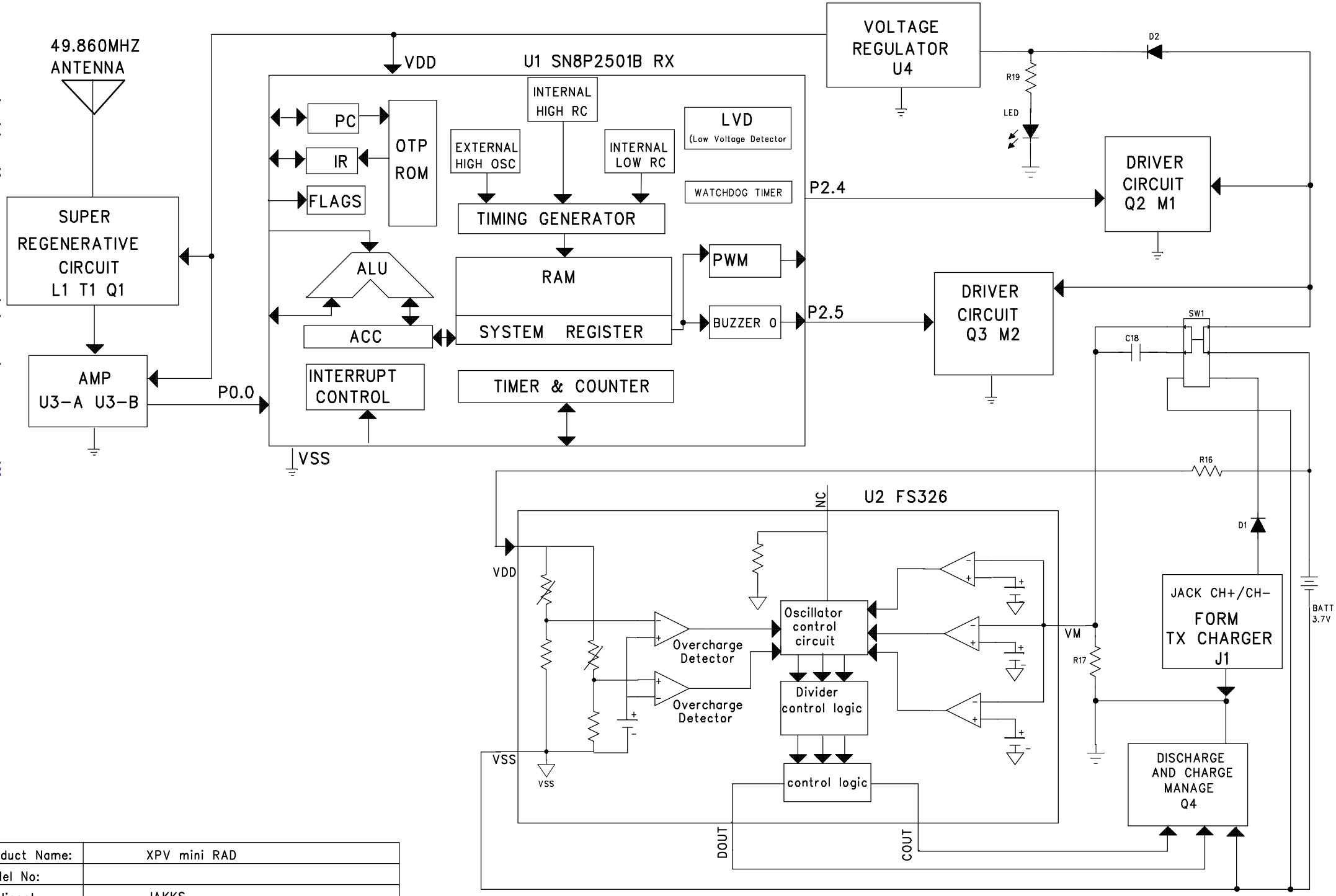

Product Name:	XPV mini RAD
Model No:	
Applicant	JAKKS

LUNG CHEONG

TITLE:	H038 XPV mini RAD	DESIGN BY:	DRAWING BY:	APPROVED BY:	SHEET:
FUNCTION:		FX Zeng	FX Zeng		1 of 1
DWG NO:		May-8-2007	May-8-2007		