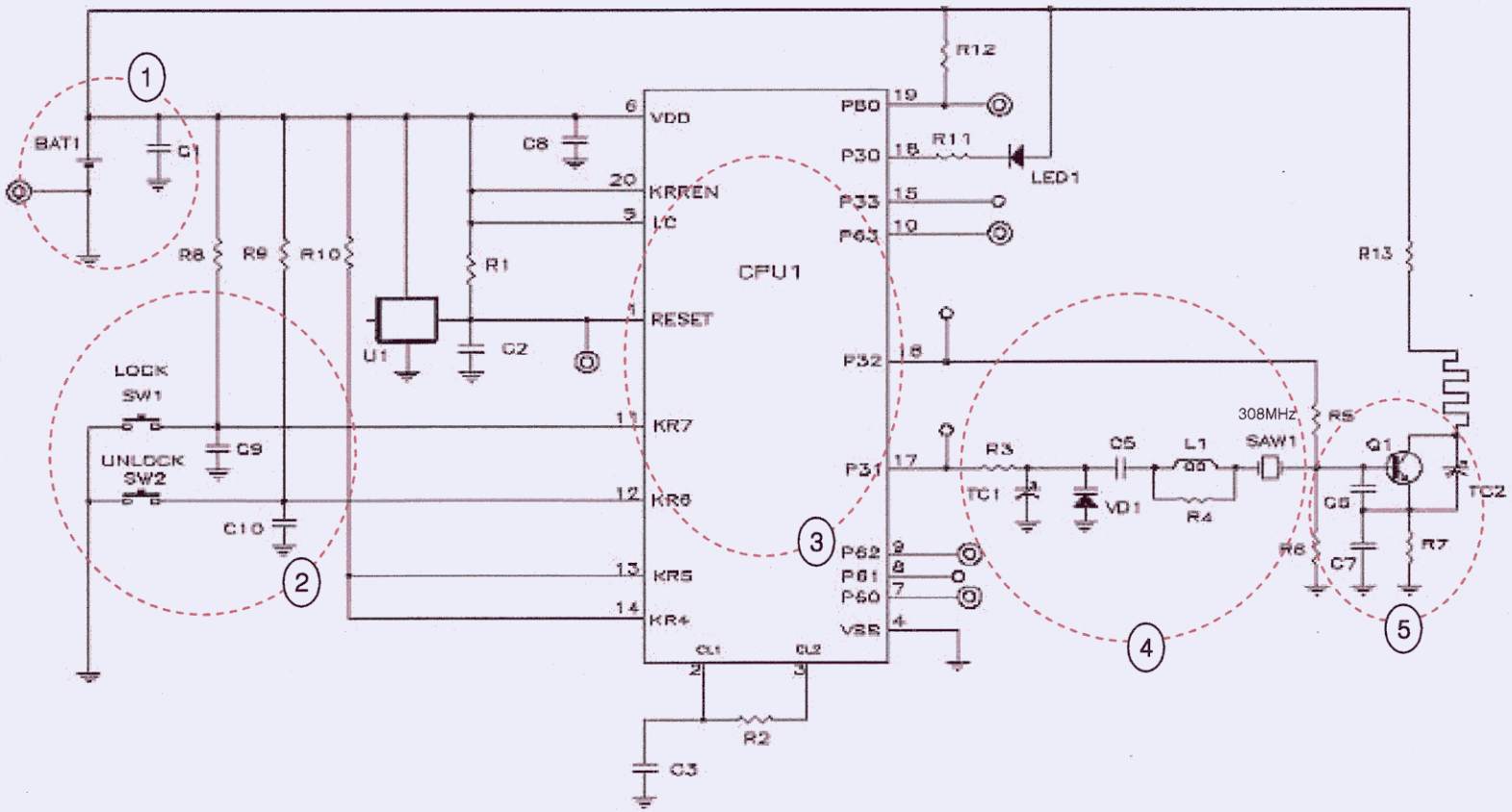

1) BATTERY PART

2) INCOMING PART

3) CPU

4) MODULATION PART

5) AMPLIFICATION & MATCHING PART

If SWITCH is pushed, CPU will receive an incoming signal.

CPU which received the incoming signal transmits DATA, and Modulation PART which received the DATA pass on ⑤PART , and ⑤PART transmits RF signal, after conducting amplification and matching