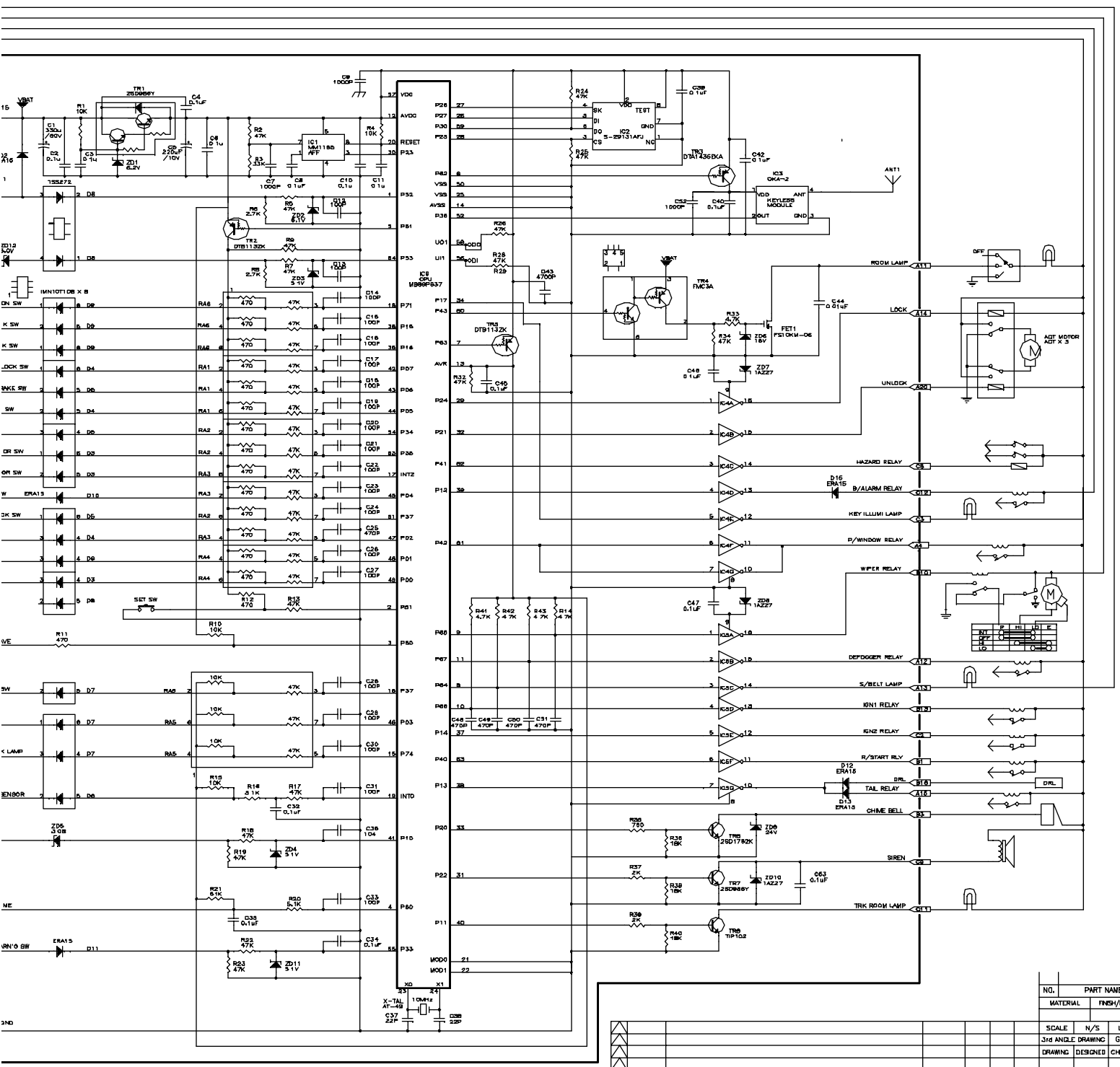


| | | | | | | | | | |
|---|---|---|---|---|---|---|---|---|---|
| C1 | C2 | C3 | C4 | C5 | C6 | | | | |
| C7 | C8 | C9 | C10 | C11 | C12 | | | | |
| B1 | B2 | B3 | B4 | B5 | B6 | B7 | B8 | | |
| B9 | B10 | B11 | B12 | B13 | B14 | B15 | B16 | | |
| A1 | A2 | A3 | A4 | A5 | A6 | A7 | A8 | A9 | A10 |
| A11 | A12 | A13 | A14 | A15 | A16 | A17 | A18 | A19 | A20 |

— 주기 —

본도는 XD-CAR ETACS DOM사항 입시사항 도면임

| NO. | PART NAME | | | DRAWING NO. | MATERIAL | Q'TY | REMARKS |
|---|---|---|---|---|---|---|---|
| MATERIAL | FINISH/COLOR | REMARKS | | CUSTOMER. | | | |
| | | | | PART NO | | | |
| SCALE | N/S | UNIT | mm | PROJ. NAME | | | |
| 3rd ANGLE DRAWING | | G TDL | | MODEL NAME | OKA-510R | | |
| DRAWING | DESIGNED | CHECKED | APPROVED | PART NAME | CIRCUIT | | |
| | | | | DRAWING NO | 40-8-8380101 | | |

| NO. | DATE | REVISONS | ECO NO. | DS | CK | APP |
|---|---|---|---|---|---|---|
| | | | | | | |

00.03.09

한국오므론전장주식회사
DMRON AUTOMOTIVE ELECTRONICS KOREA CO., LTD.

SIZE A1