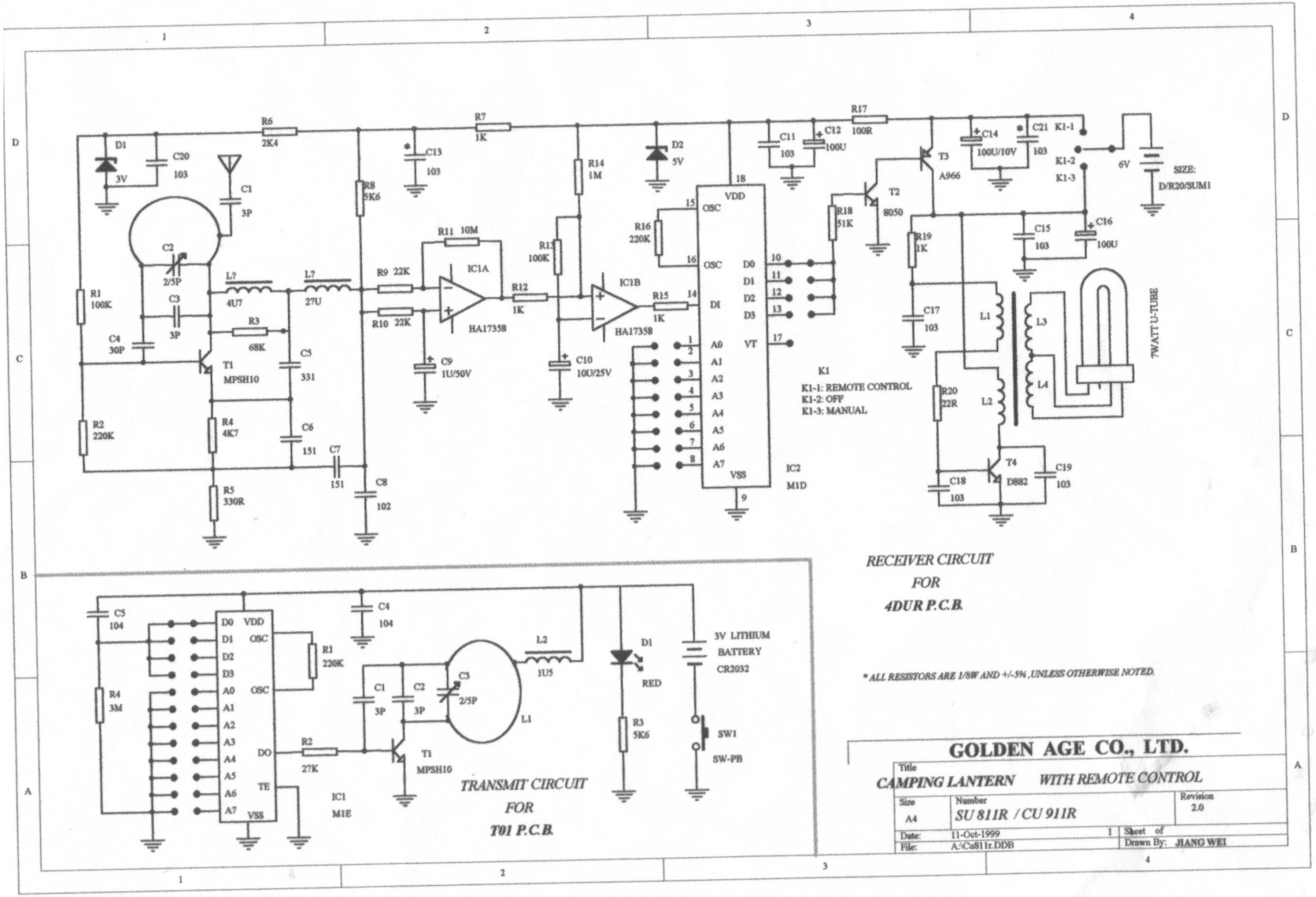

TRANSMIT CIRCUIT
FOR
T01 P.C.B.

RECEIVER CIRCUIT
FOR
4DUR P.C.B.

** ALL RESISTORS ARE 1/8W AND +/-5%, UNLESS OTHERWISE NOTED.*

GOLDEN AGE CO., LTD.

Title	*CAMPING LANTERN WITH REMOTE CONTROL*		
Size A4	Number *SU 811R / CU 911R*		Revision 2.0
Date: 11-Oct-1999	1	Sheet of	
File: A:\Cu811r.DDB		Drawn By: JIANG WEI	