autec

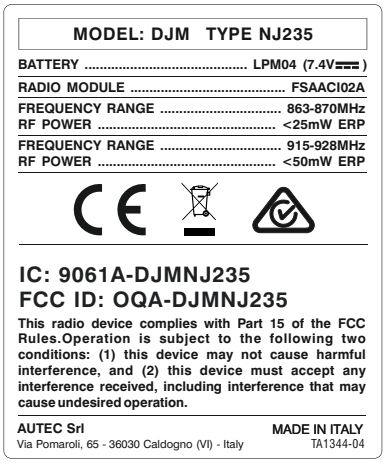

MODEL: DJM TYPE NJ235

BATTERY ..... LPM04 (7.4V⎓)

RADIO MODULE FSAACI02A

FREQUENCY RANGE 863-870MHz
RF POWER ..... <25mW ERP

FREQUENCY RANGE 915-928MHz
RF POWER ..... <50mW ERP

IC: 9061A-DJMNJ235
FCC ID: OQA-DJMNJ235

This radio device complies with Part 15 of the FCC Rules.Operation is subject to the following two conditions: (1) this device may not cause harmful interference, and (2) this device must accept any interference received, including interference that may cause undesired operation.

AUTEC Srl
Via Pomaroli, 65 - 36030 Caldogno (VI) - Italy

MADE IN ITALY
TA1344-04

DJM NJ235 label

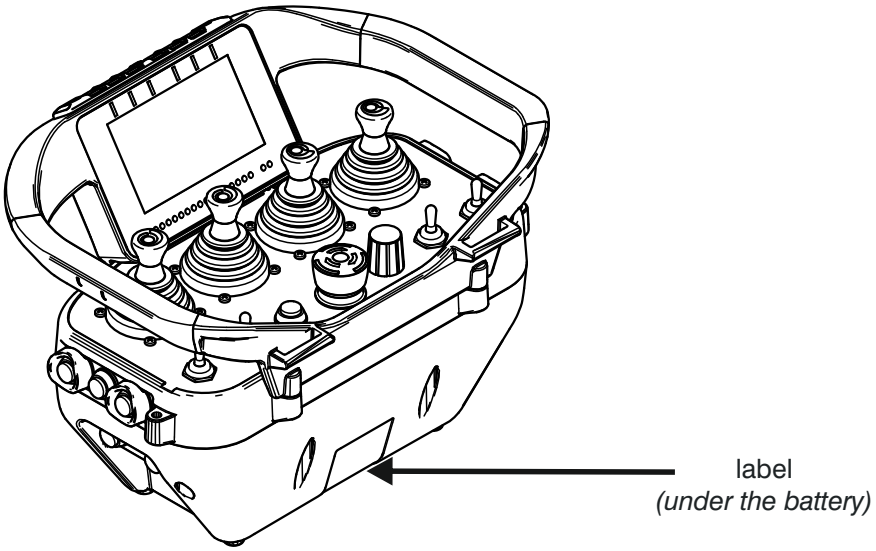

DJM NJ235 label position