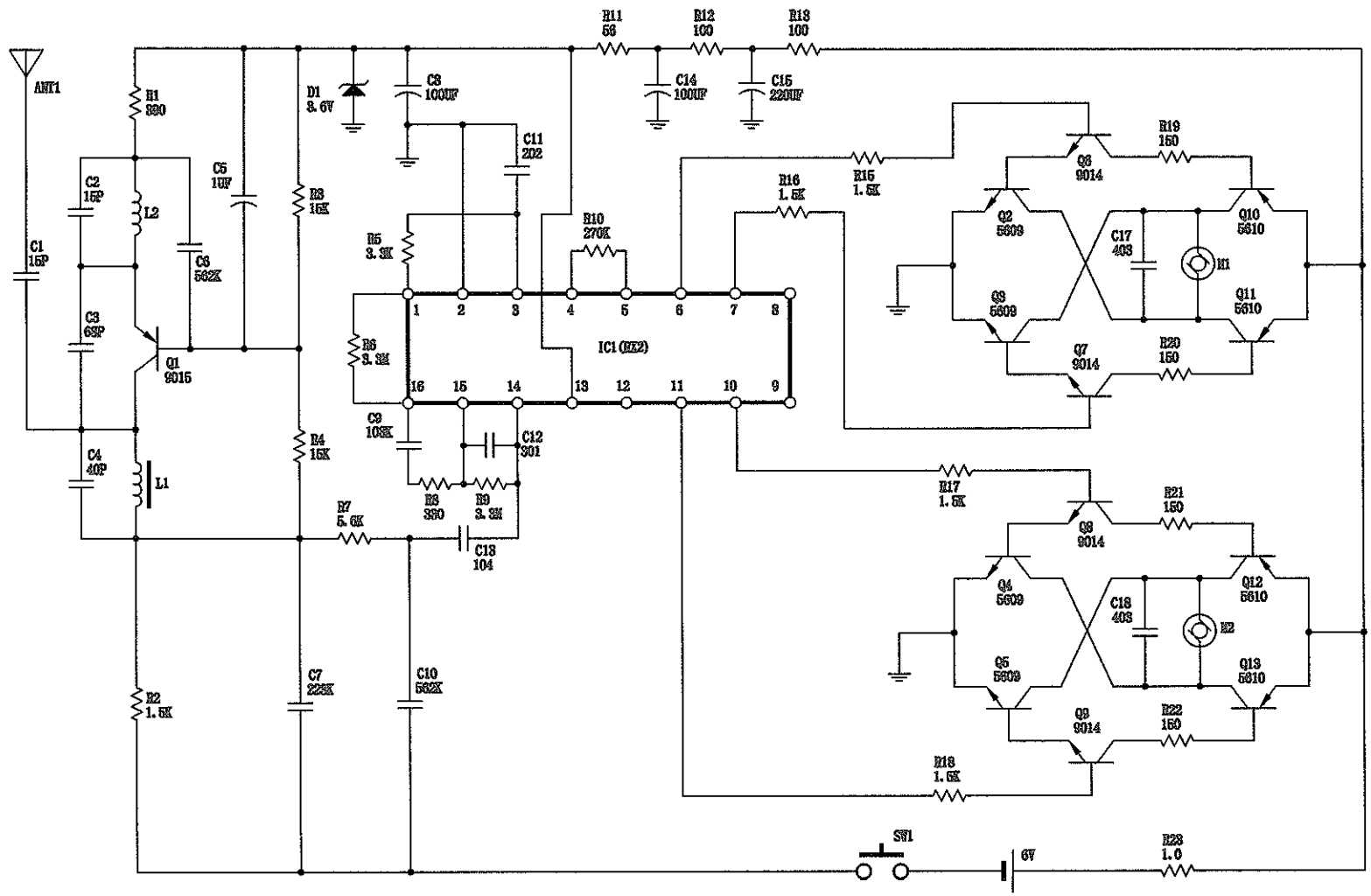

NO	TITLB		Q'TY	METERIAL	COMP'SIZE	TREAT'M	Q'TY CAL'LY
PROJACT	SCALE	UNIT	DRAWN	CHECKE	APPR	TITLE	RECEIVER CIRCUIT MAP
				MR. FU		PART DRAW NO	
HIGH CHAMPION LIMITED						DRAW NO	DATE JUN .6. 2001