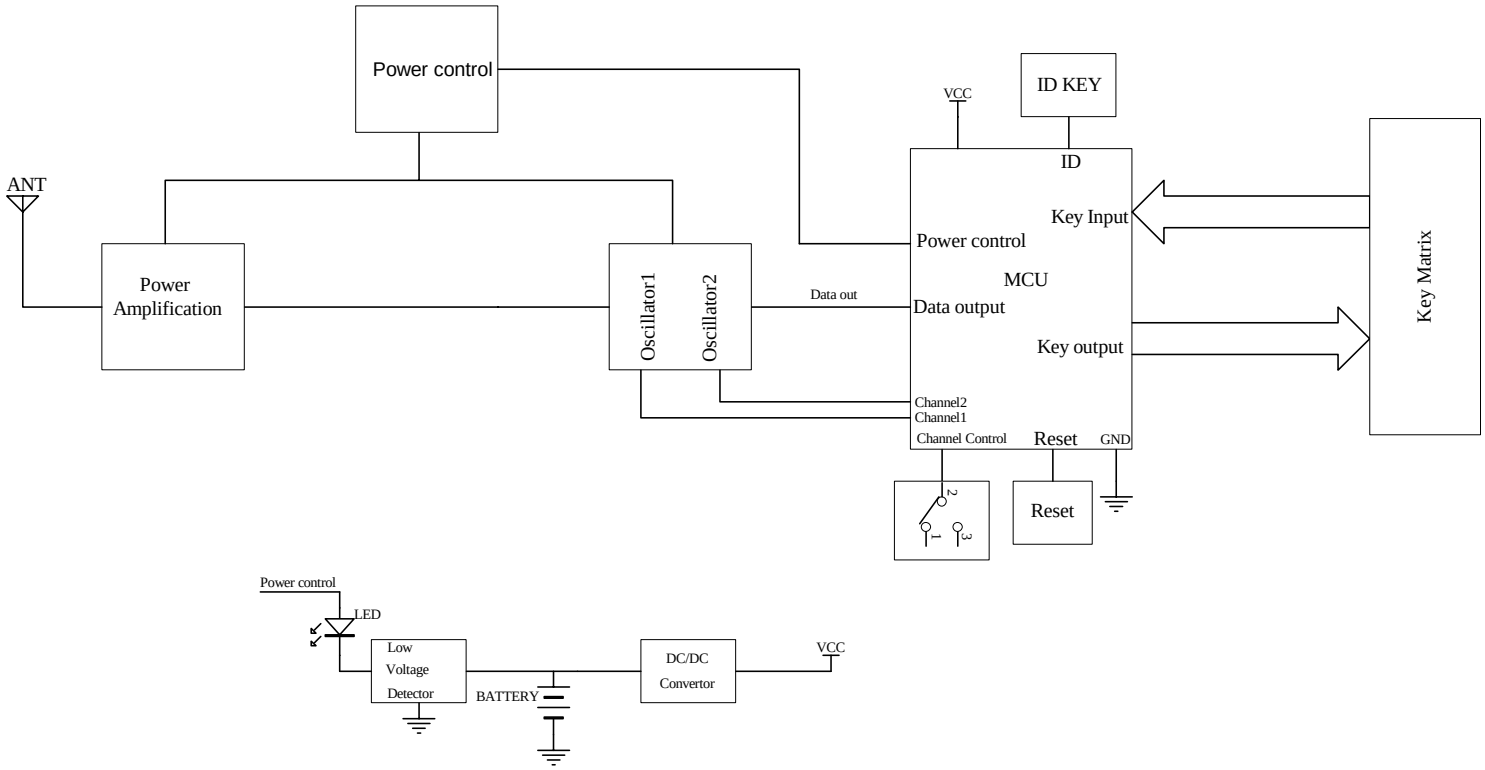

文件编号	GT-R0101-A

TITLE: K9002 block diagram		Version 1.0
Filename: E:\tcx\k9002\V12\K9002-blk.sch		Date:
Drawn by:	Approved by:	Confirmed by: