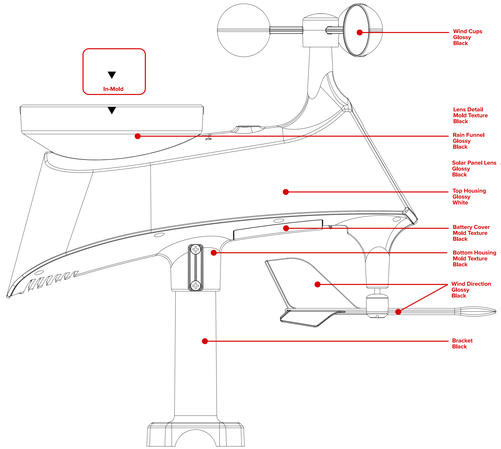

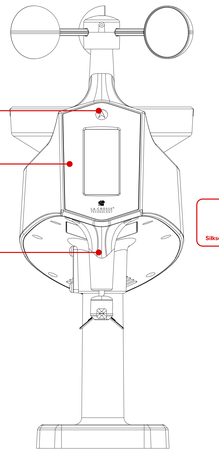

Silkscreen PMS 877 C

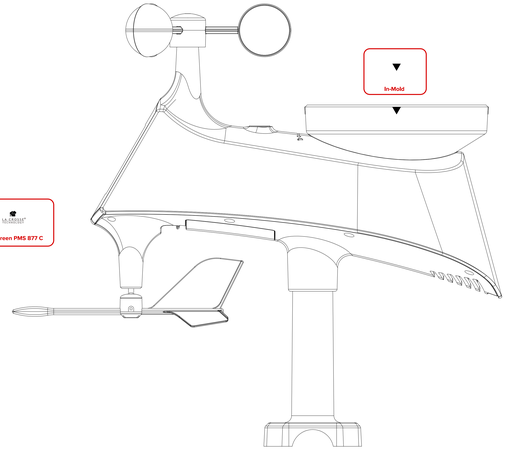

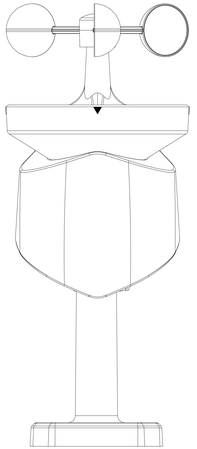

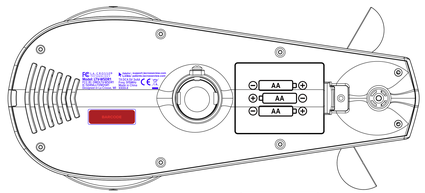
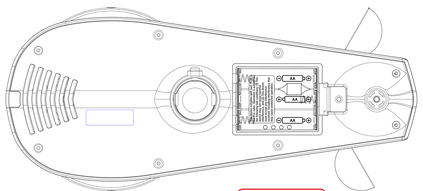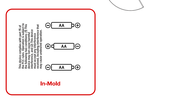
Cool Grey 3C