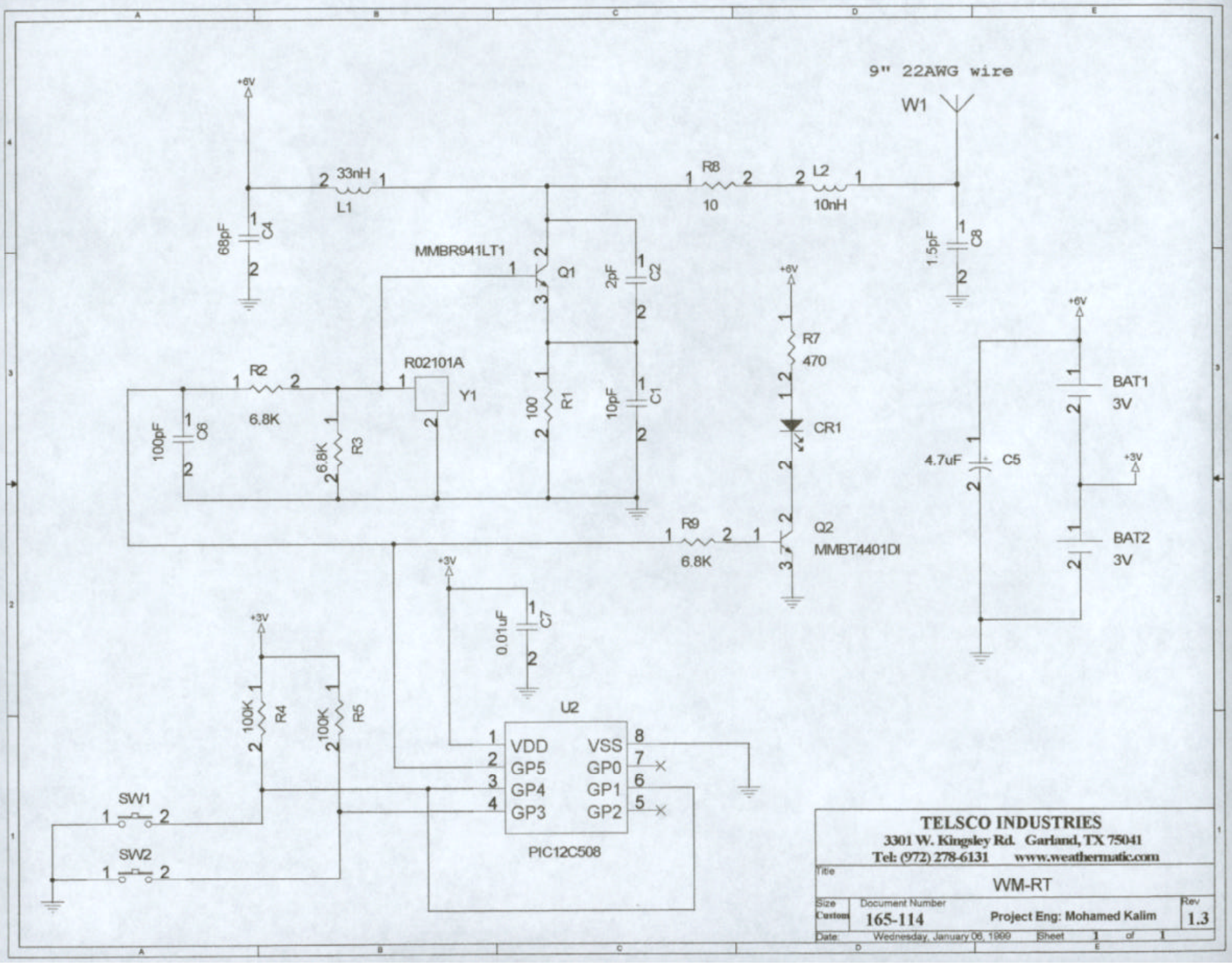
9" 22AWG wire
W1
+6V
33nH
L1
R8
10
L2
10nH
68pF
C4
1.5pF
C8
MMBR941LT1
Q1
2pF
C2
R7
470
R02101A
Y1
R2
6.8K
100pF
C6
6.8K
R3
100
R1
10pF
C1
CR1
4.7uF
C5
BAT1
3V
BAT2
3V
+3V
R9
6.8K
Q2
MMBT4401DI
0.01uF
C7
100K
R4
100K
R5
U2
VDD
GP5
GP4
GP3
VSS
GP0
GP1
GP2
PIC12C508
SW1
SW2
TELSCO INDUSTRIES
3301 W. Kingsley Rd. Garland, TX 75041
Tel: (972) 278-6131 www.weathermatic.com
Title
WM-RT
Size
Custom
Document Number
165-114
Project Eng: Mohamed Kalim
Rev
1.3
Date: Wednesday, January 06, 1999
Sheet 1 of 1