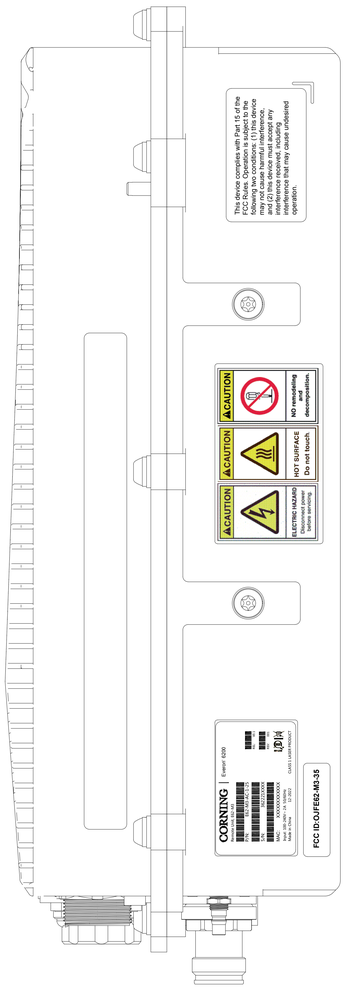
This device complies with Part 15 of the FCC Rules. Operation is subject to the following two conditions: (1) this device may not cause harmful interference, and (2) this device must accept any interference received, including interference that may cause undesired operation.
CAUTION
ELECTRIC HAZARD
Unplug before servicing
CAUTION
HOT SURFACE
Do not touch
CAUTION
NO removing
and
decomposition
CORNING
Everon 6200
Remote Unit, E62-M3
P/N: E62-M3-AC-1-25
S/N: 362221XXXX
MAC: XXXXXXXXXXXX
Input: 100-240V~ 2A 50/60Hz
Made in China 12-2022
CLASS 1 LASER PRODUCT
FCC ID:OJFE62-M3-35

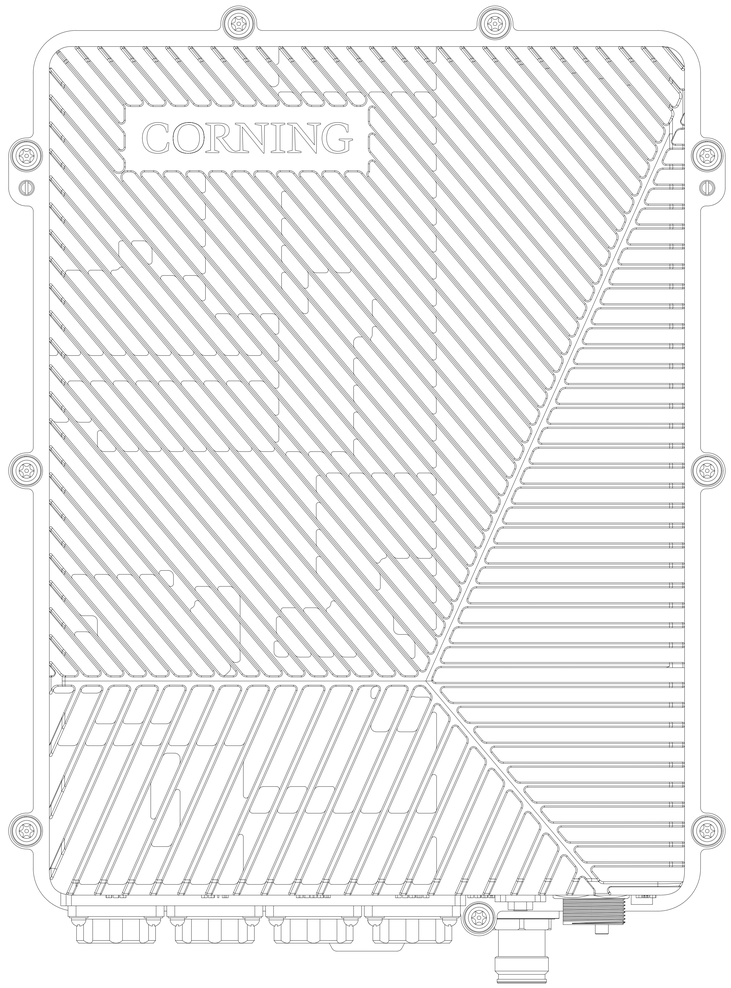
CORNING

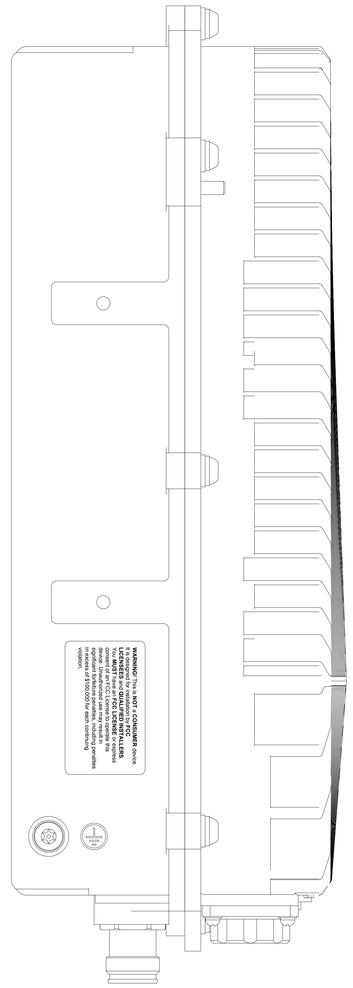
WARNING! This is NOT a CONSUMER device.
It is designed for installation by FCC LICENSEES and QUALIFIED INSTALLERS.
You MUST have an FCC LICENSE or express consent of an FCC License to operate this device. Unauthorized use may result in significant forfeiture penalties, including penalties in excess of $100,000 for each continuing violation.

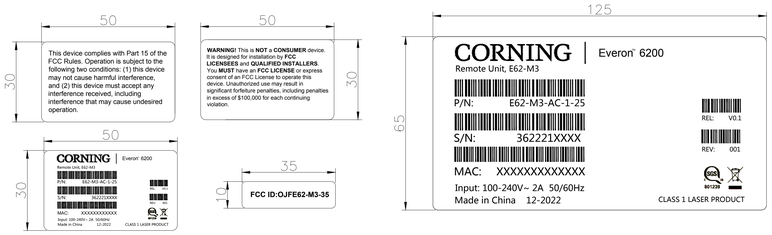
50
30
This device complies with Part 15 of the FCC Rules. Operation is subject to the following two conditions: (1) this device may not cause harmful interference, and (2) this device must accept any interference received, including interference that may cause undesired operation.
50
30
WARNING! This is NOT a CONSUMER device. It is designed for installation by FCC LICENSEES and QUALIFIED INSTALLERS. You MUST have an FCC LICENSE or express consent of an FCC License to operate this device. Unauthorized use may result in significant forfeiture penalties, including penalties in excess of $100,000 for each continuing violation.
50
30
CORNING
Everon 6200
Remote Unit, E62-M3
P/N: E62-M3-AC-1-25
S/N: 362221XXXX
MAC: XXXXXXXXXXXX
Input: 100-240V~ 2A 50/60Hz
Made in China 12-2022
CLASS 1 LASER PRODUCT
35
10
FCC ID:OJFE62-M3-35
125
65
CORNING
Everon 6200
Remote Unit, E62-M3
P/N: E62-M3-AC-1-25
S/N: 362221XXXX
MAC: XXXXXXXXXXXX
Input: 100-240V~ 2A 50/60Hz
Made in China 12-2022
REL: V0.1
REV: 001
CLASS 1 LASER PRODUCT

B41

C-Band

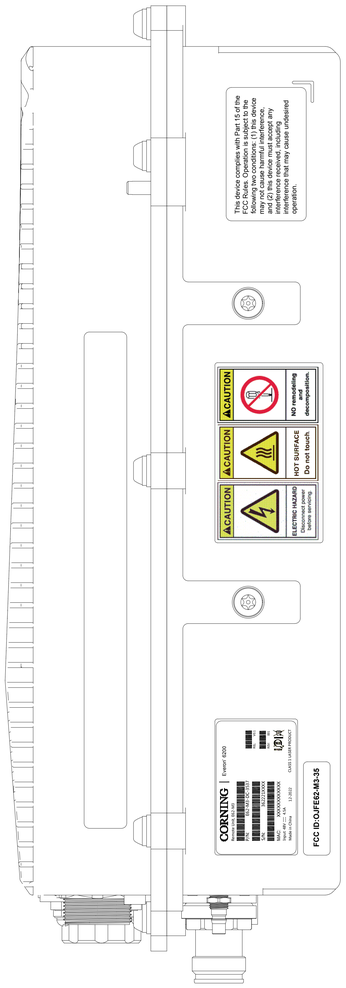
This device complies with Part 15 of the FCC Rules. Operation is subject to the following two conditions: (1) this device may not cause harmful interference, and (2) this device must accept any interference received, including interference that may cause undesired operation.
CAUTION
ELECTRIC HAZARD
Disconnect power before servicing
CAUTION
HOT SURFACE
Do not touch.
CAUTION
NO remoding and decomposition.
CORNING
Everon 6200
P/N: E62-M3-DC-3537
S/N: 362221XXXX
MAC: XXXXXXXXXXXX
Input: 48V 4.5A
Made in China 12-2022
CLASS 1 LASER PRODUCT
FCC ID:OJFE62-M3-35

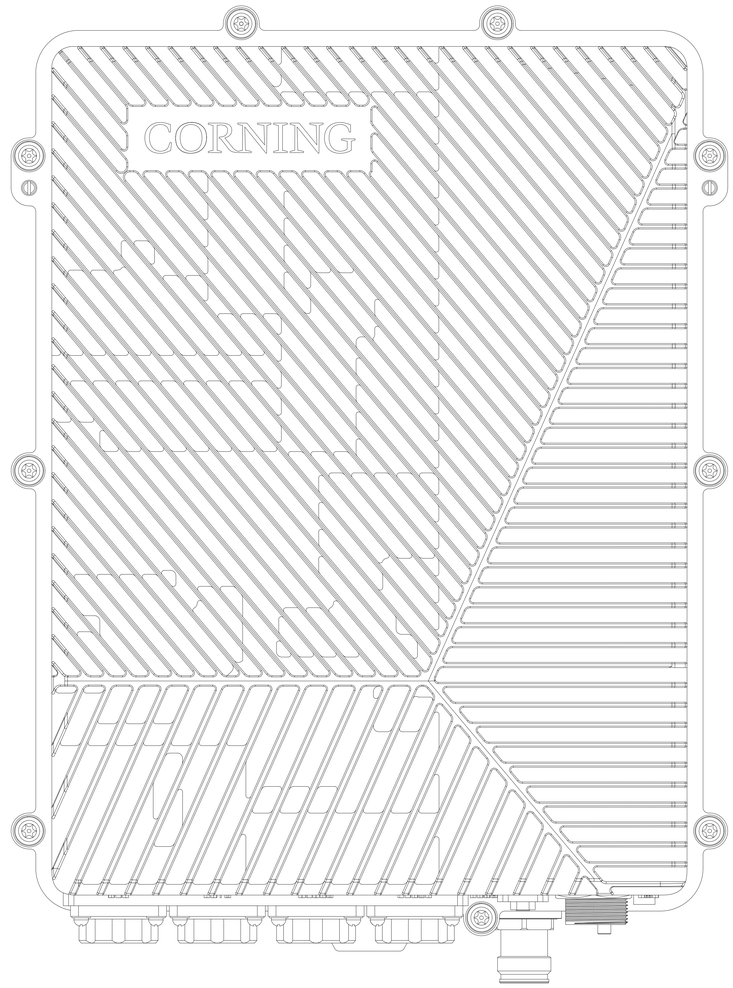
CORNING

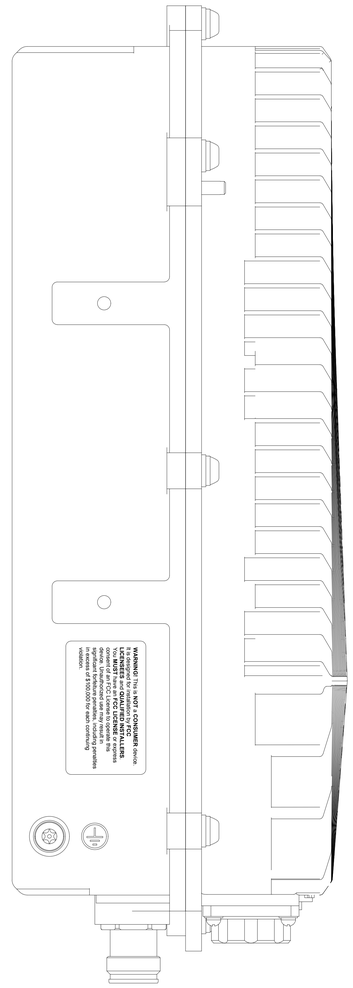
WARNING! This is NOT a CONSUMER device. It is designed for installation by FCC LICENSEES and QUALIFIED INSTALLERS. You MUST have an FCC LICENSE or express consent of an FCC License to operate this device. Unauthorized use may result in significant forfeiture penalties, including penalties in excess of $100,000 for each continuing violation.

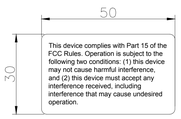
50
30
This device complies with Part 15 of the FCC Rules. Operation is subject to the following two conditions: (1) this device may not cause harmful interference, and (2) this device must accept any interference received, including interference that may cause undesired operation.

50
30
WARNING! This is NOT a CONSUMER device. It is designed for installation by FCC LICENSEES and QUALIFIED INSTALLERS. You MUST have an FCC LICENSE or express consent of an FCC License to operate this device. Unauthorized use may result in significant forfeiture penalties, including penalties in excess of $100,000 for each continuing violation.

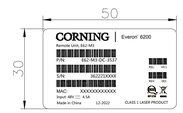
50
30
CORNING
Everon 6200
Remote Unit, E62-M3
P/N: E62-M3-DC-3537
S/N: 362221XXXX
MAC: XXXXXXXXXXXX
Input: 48V 4.5A
Made in China 12-2022
REL: V0.1
REV: 001
CLASS 1 LASER PRODUCT

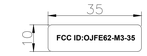
35
10
FCC ID:OJFE62-M3-35

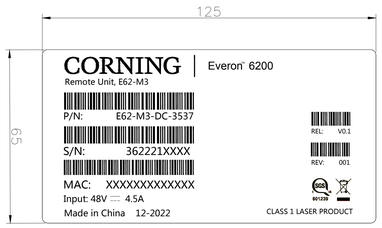
125
69
CORNING
Everon 6200
Remote Unit, E62-M3
P/N: E62-M3-DC-3537
S/N: 362221XXXX
MAC: XXXXXXXXXXXX
Input: 48V 4.5A
Made in China 12-2022
REL: V0.1
REV: 001
CLASS 1 LASER PRODUCT