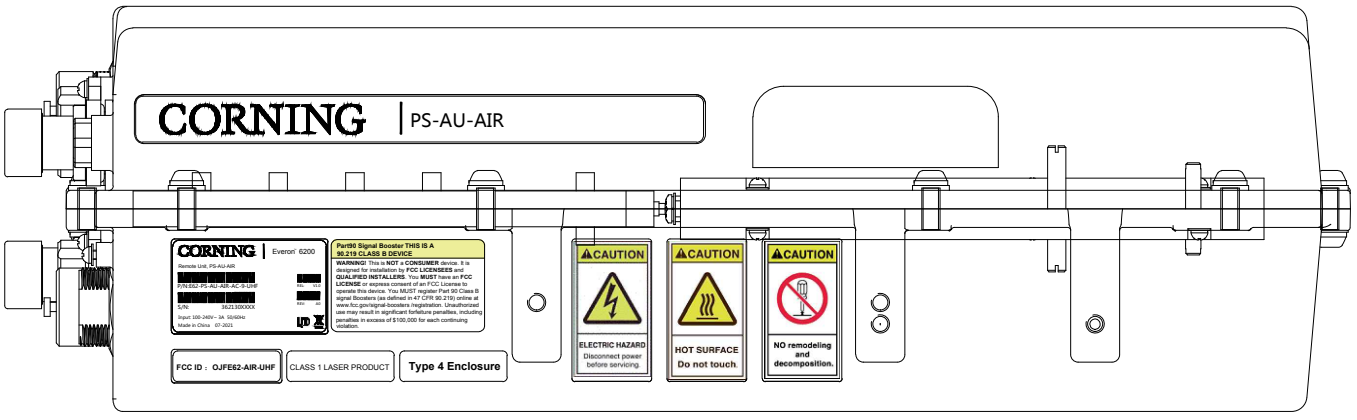
CORNING
PS-AU-AIR
CORNING
Everon 6200
Part90 Signal Booster THIS IS A 90.219 CLASS B DEVICE
CAUTION
ELECTRIC HAZARD
Disconnect power before servicing.
CAUTION
HOT SURFACE
Do not touch.
CAUTION
NO remodeling and decomposition.
FCC ID : OJFE62-AIR-UHF
CLASS 1 LASER PRODUCT
Type 4 Enclosure

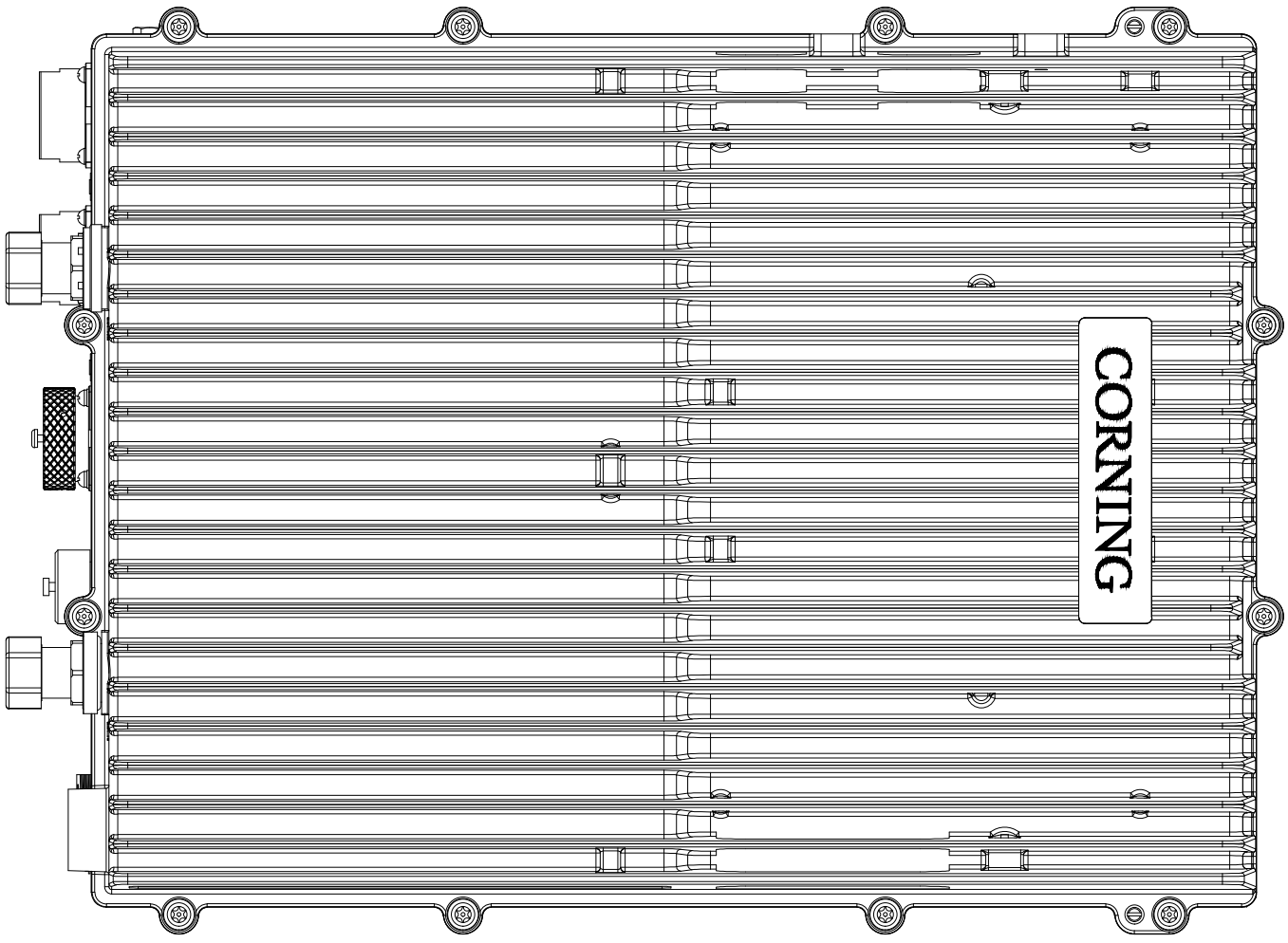
CORNING

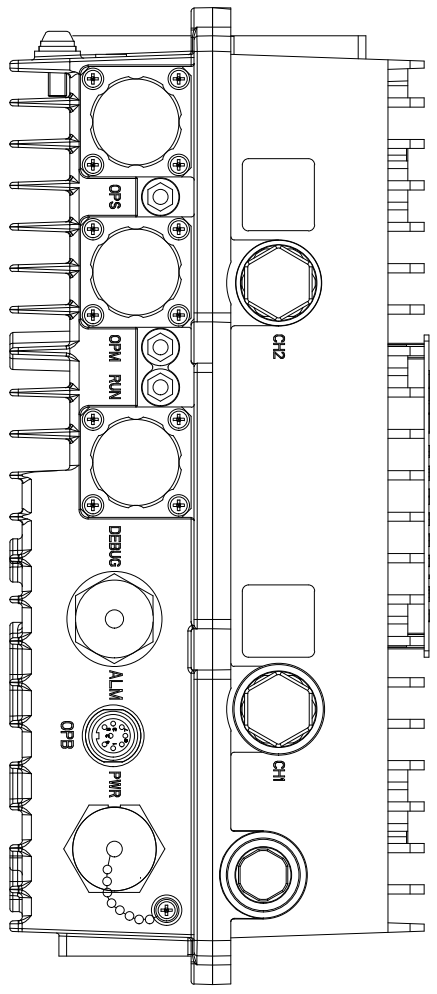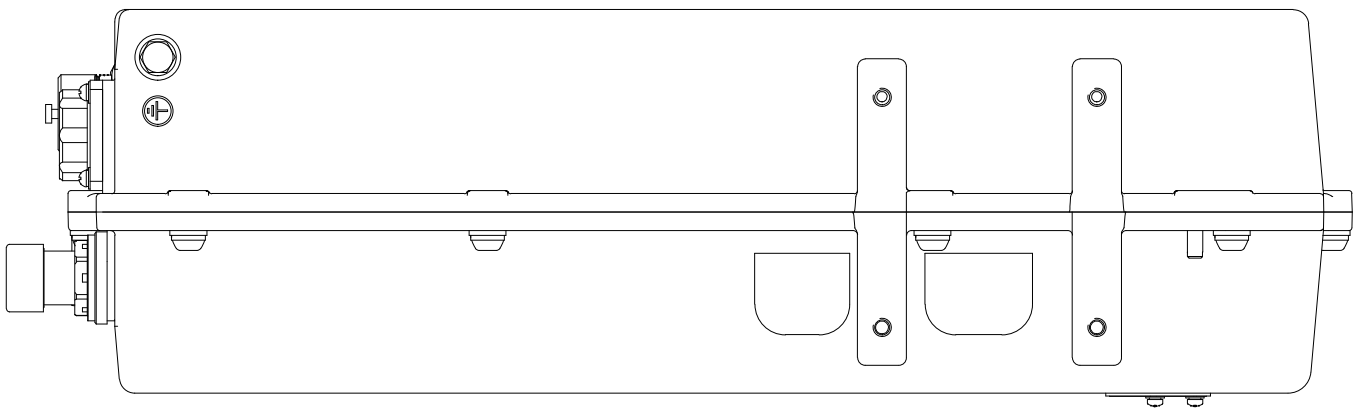
OPS
OPM
RUN
DEBUG
ALM
OPB
PWR
CH2
CH1