Label and Label Location

MIT-2040TW-01 Label

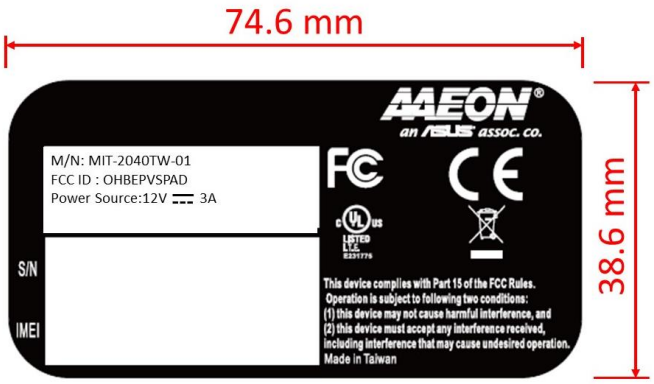
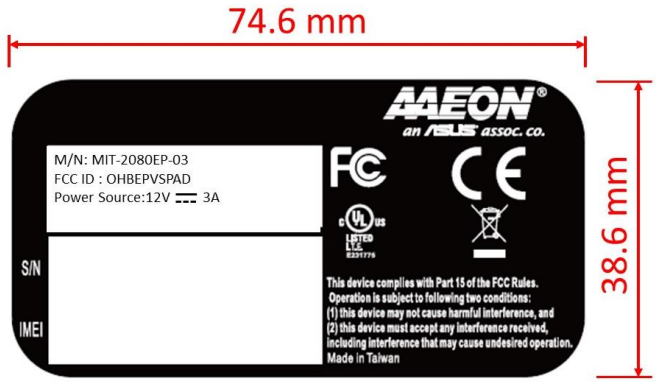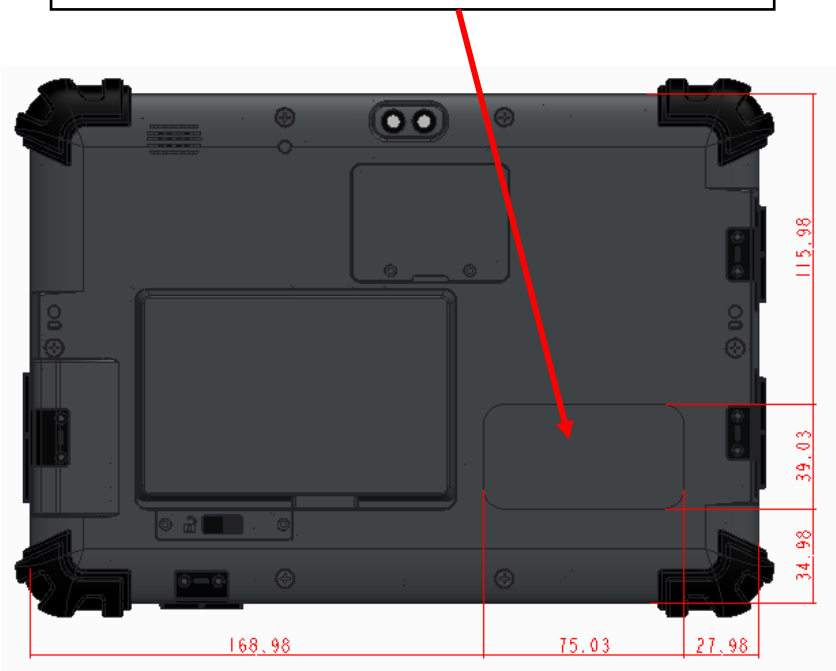
MIT-2080EP-03 Label