Versus Information Systems

Hardware and Wiring Installation Guide

VERSUS TECHNOLOGY, INC.
2600 MILLER CREEK ROAD
TRAVERSE CITY, MI 49684
(231) 946-5868
www.versustech.com

Copyright 1991, 1992, 1993, 1996, 1998, and 2000 Versus Technology, Inc., all rights reserved.

This document contains user's information on technology that is proprietary to Versus Technology, Inc. Permitted transmittal, receipt, or possession of this document does not express license or imply any rights to use, sell, design, or manufacture this information. No reproduction, publication or disclosure of this information, in whole or in part, shall be made without prior written authorization from an officer of Versus Technology, Inc.

WARNING! This product is not designed, intended, authorized or warranted for use in any life support or other application where product failure could cause or contribute to personal injury, death, or severe property damage. This product or its systems are covered by one or more of the following U.S. Patents: 4,906,853; 5,017,794; 5,027,314; 5,119,104; 5,276,496; 5,355,222; 5,387,993; 5,548,637; 5,572,195, 6,104,295.

FCC STATEMENT: Components complying with part 15 of the FCC Rules. Operation is subject to the following two conditions: 1) This device may not cause harmful interference, and 2) this device must accept any interference received, including interference that may cause undesired operation.

Modifying or tampering with the transceiver's or receiver's internal components can cause a malfunction, invalidate the warranty, and will void your FCC authorization to use these products.

Revision date: 5/4/01

Contents

1. INTRODUCTION 1
1.1 Purpose of This Guide 1
1.2 Computer System Requirements 1
1.3 Terms and Definitions 1
1.4 Parts List 2
2. SYSTEM DESCRIPTION 3
2.1 Infrared (IR) Tracking 3
2.2 Radio Frequency (RF) Signals 3
2.3 System Hardware Components 4
3. PLANNING THE INSTALLATION 7
3.1 Collector and Concentrator Location Planning 8
3.2 Sensor Location Planning 8
3.3 Use of Unauthorized Components 12
3.4 List of Materials 12
3.5 List of Tools 12
3.6 Safety and Code Considerations 13
4. SYSTEM HARDWARE INSTALLATION 15
4.1 Cable Installation 15
4.2 Sensor Installation 15
4.3 Punch-down Block and Collector Installation 16
4.4 Connecting Sensors to Collectors 17
4.5 Communication Room Check 19
4.6 Testing RF Sensors 24
4.7 Perimeter Activation Sentinel (PAS) Unit Installation 25
5. TROUBLESHOOTING GUIDE 25
5.1 Badge Battery Replacement 26
6. INSTALLATION FORMS 30

1. Introduction

1.1 Purpose of This Guide

This document is intended to provide the information required to install the hardware and wiring components of a VIS system. Read this entire document before proceeding with the installation. A general understanding of wiring and telephone installation techniques is assumed.

1.2 Computer System Requirements

The software runs in the Microsoft Windows 95, 98 or Windows NT environment and requires a computer system with reasonable capacity and speed. The minimum computer system requirements are:

Microsoft Windows 95 or later
Pentium 500 MHz or better
128 MB RAM
2GB hard drive
Ethernet Card

1.3 Terms and Definitions

The following terms will be used throughout this hardware installation guide, to refer to system components and modes of operation.

Bridging Clip - A small metal clip used in a punch-down block to short the left-hand columns to the right hand columns of punch-down terminals.

Coaxial Cable - This type of cable is a special form of shielded wire in which there is a single inner conductor held at a fixed distance from an outer braid or foil shield in a precise manner. Control of the spacing and makeup of the cable dielectric allow it to handle very high frequencies in a predictable fashion.

Collector - This device gathers the tracking data from as many as 24 sensors, processes it as required, and sends it via the 2-pair collecting network to the concentrator. Each system must contain at least one collector, and many systems will contain more than one.

Concentrator - This device provides an interface between the 2-pair network that connects collectors together (the "Collector Network") and the computer system. It assembles the data from the various collectors and bundles it for delivery to the host computer. Each system must contain at least one concentrator, and many systems will contain only one.

Impedance - This is a measure of a characteristic of wire that is very important when digital data signals are to be sent over the wires at high speeds. All wires have impedance determined by their makeup and twisting called the "characteristic impedance" of the wire. Most solid twisted pair wire is about 100 ohms impedance, and the coaxial cables used are 50, 75, or 93 ohms.

Sensor - A sensor is a device that gathers infrared light energy and converts it to an electrical signal, which is then sent over a single pair of wires to a collector.

Sensor Connection - A sensor connection is a single pair cable that connects a sensor to a collector port. All of the sensor connections in a system may be referred to as the "Sensory Network".

Plenum - This term refers to any area that serves as a duct or passage for breathable air. Many office buildings use the space above the suspended ceiling as a return air "plenum" for the heating and air conditioning systems. Most laws require that any cables, which run in an air plenum, be made of materials which will not burn, or which will not release toxic gases when burned.

Punch-down Block - This device is used to connect sensor wires to the collector in an organized fashion. A special tool is used to "punch" the wire onto the punch-down block terminals, which causes the terminals to penetrate the wire insulation and cut off excess wire in one easy step. Punch-down Blocks are the preferred method of connection for solid wire in telephone systems.

RJ - Acronym for Registered Jack - The system uses some modular style connectors that are identified by their 'RJ' designations. RJ-11 is a generic term, which is often used to refer to a six-position jack, though it specifically refers to a single pair connection in a six-position shell. RJ-12 refers to a two pair connection in a six pair shell, and RJ-25 refers to a three pair connection in a six pair shell.

Shielded Wire - This type of wire is wrapped in a braided or foil shield that protects it from electrical interference. Use of shielded wire may be the only solution in a very high noise environment. (See Wiring Considerations.)

STP - Acronym for Shielded Twisted Pair - This is wiring usually used in audio system installations where electrical interference is a prime concern. (See Shielded Wire.)

Twisted Pair - The wire used to interconnect sensors, collectors, and interfaces is twisted into pairs to make the wire characteristics more uniform and to cancel out many types of interference to which the wires might be subjected. (See UTP.)

USOC - Acronym for Universal Service Ordering Codes - The connectors and wiring adhere to the USOC wiring practices standard wherever possible.

UTP - Acronym for Unshielded Twisted Pair - This is the typical solid, paired wire used in phone system installations. It has no outer shield layer. (See Twisted Pair.)

1.4 Parts List

Part Number	Description
VER-1830	Asset Tag IR/RF
VER-1700	Locator Badge
VER-1780	Personnel Alert Badge
VER-2402	Collector
VER-2015	Concentrator
VER-4422	IR Sensor
VER-4450	RF Sensor

2. System Description

The Versus Information System is a reliable, flexible platform for locating personnel and equipment. The system badges, worn by staff or attached to assets, emit signals that contain information about the badge. The information is sent through the sensory network to a host computer that retrieves the information and translates the data into names of rooms, personnel, and equipment. Workstations throughout the facility can access the location data with various client software programs, which display current locations of personnel and equipment, display alarms on the monitor, send pager messages, and store for later use in reports and archiving.

System Structure

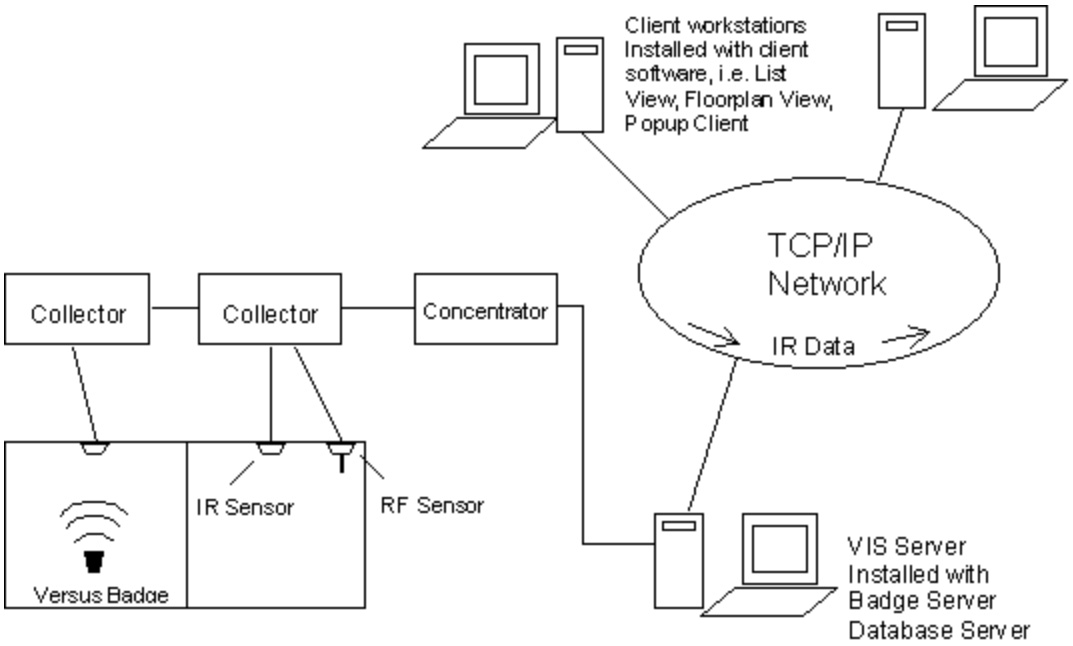

2.1 Infrared (IR) Tracking

The use of IR signals for tracking has distinct advantages, since it allows accurate locating using signals that will not penetrate walls or floors. A system of strategically placed sensors receives IR signals as badges move between rooms of a building.

2.2 Radio Frequency (RF) Signals

In addition to the IR signal, a low-power RF signal is incorporated into some badges. RF signals penetrate walls and ceilings, which allows the RF signal to act as a backup if the IR signal is blocked. If the IR signal is blocked, and an RF sensor senses the RF signal, the last known location of the badge is shown. In addition, RF badges and sensors can be used for security purposes in locations where tracking assets is important.

2.3 System Hardware Components

The Versus Information System is made up of a network of badges, sensors, collectors and concentrators.

2.3.1 Badges

Badges are worn by personnel or attached to equipment. Badges send IR or RF signals to the sensors installed in each room. This signal contains encoded digital information that is used to identify and obtain the status of the badge. Motion, timing, battery state, and auxiliary information are all included in the signal.

All Versus badges that include IR technology have a unique feature that serves to extend battery life. They contain a motion-sensing device that causes the badge to transmit most frequently when in motion and gradually reduce this frequency when there is no motion.

There are several types of badges. Badges can include infrared (IR), radio frequency (RF), or IR and RF technology, depending on the needs of the facility. Some badges also include a button for intercom communication and alarm notification. The host computer handles alert conditions on equipment. Consult the badge specification sheets for more information on battery and component functions.

2.3.1.1 IR Badges

Because IR badges use near-visible light to communicate with the sensors, the signal can be hidden from the sensors by clothing or obstacles. It is important to be aware that IR badges should not be covered or hidden from view.

The Locator Badge

The Locator Badge sends infrared signals from two emitters located at the top left and right corners of the badge case. The signals are directed upward and somewhat forward at a wide angle to be received by the sensors. Better performance occurs by keeping the badge in an upright position.

2.3.1.2 IR/RF Badges

In addition to sending IR signals, IR/RF badges send radio frequency signals that are received by RF sensors.

RF signals are used for supervisory capacity, in the case where IR signals are hidden from view, and for sending alarm or call signals triggered by pressing a button on badges that include buttons..

IR/RF Personnel Alert Badge

The Personnel Alert Badge is incorporated with IR and RF technology. It is also equipped with a call button that, when pressed, notifies the system to activate a customizable preprogrammed response.

IR/RF Asset Tag

The Asset Tag contains IR and RF technology. It is used to identify the current location of portable assets.

2.3.2 Sensors

Sensors receive signals from badges, convert the signals into electrical signals, and pass the data along to collectors. Sensors are usually mounted in the ceiling tiles of a facility. There are two types of sensors, infrared (IR), and radio frequency (RF).

2.3.2.1 Infrared (IR) Sensor

- Receives IR signals from badges.
- Converts IR signals into electrical signals.
- Sends electrical signals to system via a single unshielded twisted pair wire.
- 360-degree horizontal coverage.
- 180-degree hemispherical vertical coverage.
- 15’ radius sensitivity.

2.3.2.2 Radio Frequency (RF) Sensor

- Receives RF signals from badges with RF technology.
- Operates at 433.92 MHz receive frequency.
- Converts RF signals into electrical signals.
- Sends electrical signals to system via a single unshielded twisted pair wire.
- 50’ radius sensitivity.

2.3.3 Collector

After sensors receive signals from badges and convert them to electrical signals, the data is passed to a Collector. Up to 24 sensors can be connected to one Collector, although we recommend no more than 20-22 at initial installation to allow for future expansion, possibly without having to add additional Collectors. The Collector accepts the inputs from the sensors and assembles the inputs into larger, network-ready packets. The packets are then relayed to the concentrators.

A punch-down connector block is included with the Collector. The connector block plugs directly into the 50-pin connector on the side of the Collector. Collectors connect from one to the another in a daisy chain configuration. The 24V power supply for the Collector is also included, as well as mounting supplies.

2.3.4 Concentrator

Concentrators receive all data passed through collectors, format the data, and send it to a computer as a data packet. Up to four collectors can be connected to one concentrator. Up to 24 Concentrators can be connected to one Badge Server.

2.3.4.1 Badge Tester

Badge Testers are available from Versus Technology. A Badge Tester tests the battery and auxiliary information from the badge. It will indicate whether the badge is good or if the battery needs to be replaced. The instructions for using the Badge Tester are as follows:

1. Turn the Badge Tester on.

2. Place the front of the badge you are testing a half inch or closer in front of the test window on the Badge Tester.

3. The badge condition will be indicated as follows:
    - If the badge is good, the tester will beep once, and the green light will illuminate.
    - If the battery is low and needs replacing, the tester will beep twice, and the red light will illuminate.

3. Planning the Installation

Planning the system design is crucial to the success of the installation. Thorough planning will make the installation go smoother, and there will be less likelihood of mistakes or oversights. When planning an installation, certain rules and limitations must be observed. The equipment has been designed to provide trouble free operation in various environments, and adherence to the guidelines is critical for a reliable installation. The following sections will detail items that must be included in a system plan to ensure a successful installation.

The **Installation Checklist**, located in section 6, is intended to be a record of the installation steps. Before starting the installation, fill in the checklist by referring to the contractual floor plan schematic for the quantities and numbers of zones and other components for the specific installation. The Punch-down Block Organization List in section 6 will also be used during the planning stages of the installation.

General System Hardware Configuration

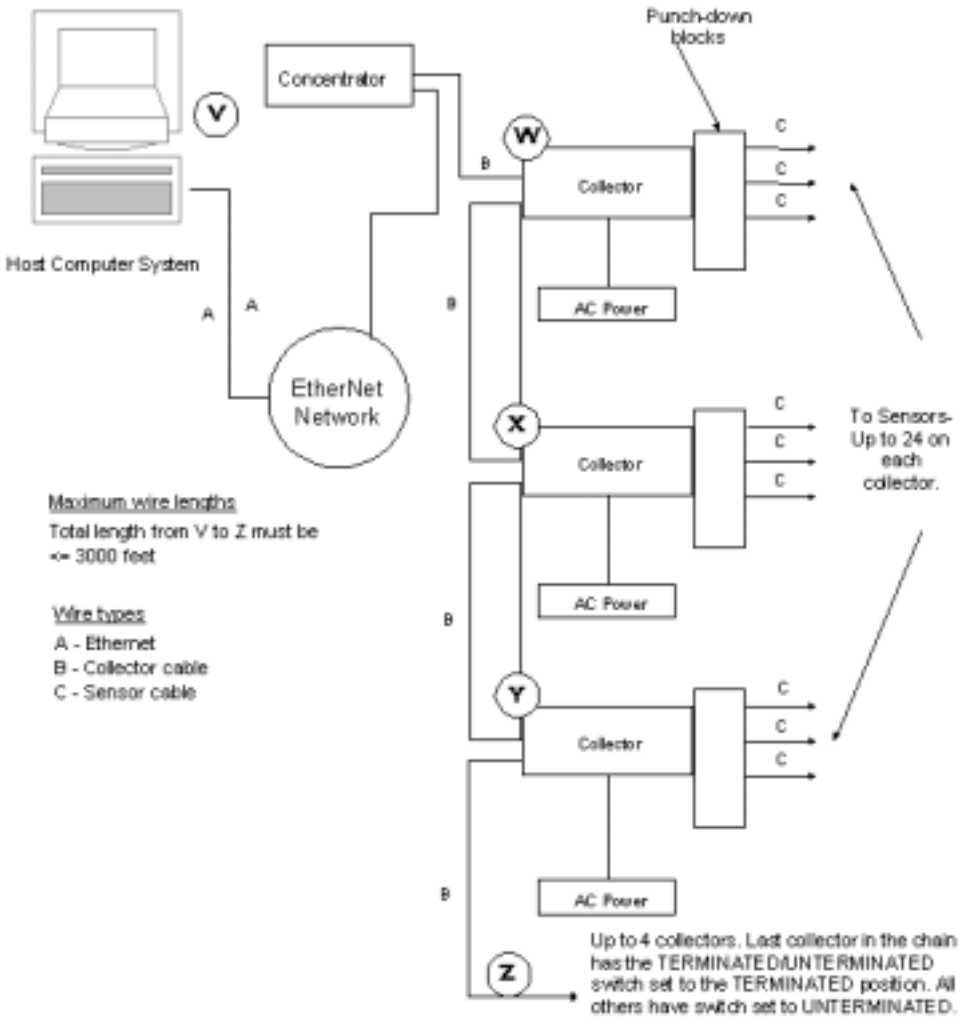

3.1 Collector and Concentrator Location Planning

When planning an installation, it is important to locate a proper place for the concentrators and collectors. Collectors should be mounted in telephone or service areas that are near the sensory networks they service. The sensor wires will run from the collectors to the various sensor locations throughout the facility. The concentrator(s) should be mounted in a location central to the collector(s) to minimize the length of collector network runs. In smaller installations, collectors and concentrators may all be located in the same place in a telephone or utility closet. The location selected should have easy access for servicing, but be secure against tampering by unauthorized personnel. Make sure the locations selected are free from extremes of heat, cold, and moisture, as with any electronic equipment.

Caution: Collectors may be affected by high watt radio or paging antennas. Do not place a collector in close proximity to one of these antennas.

3.1.1 Collector Network Length Limitations

There must be no more than four collectors on any one concentrator as shown in the RS-485 loop display below. Collectors should not be placed more than 1000 feet apart. The total length of the collector network (from the Concentrator to the last Collector in the chain) must not be more than 3000 feet.

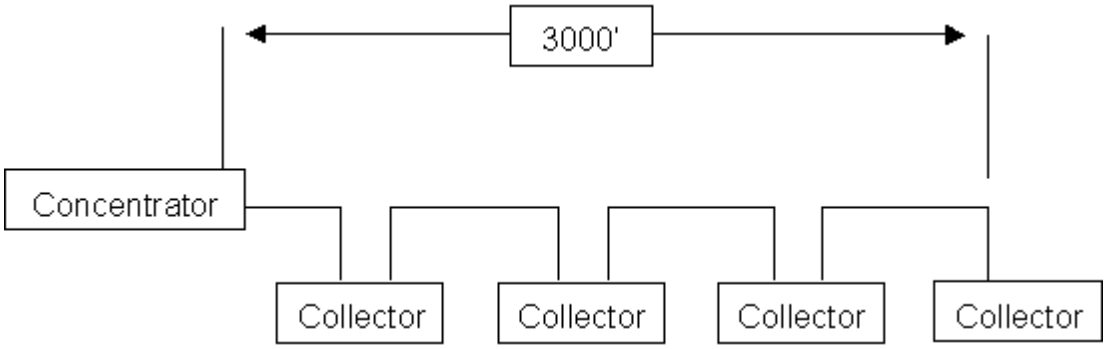

3.2 Sensor Location Planning

One of the most important steps in an installation involves planning the sensor locations. A complete understanding of sensors and badges is very helpful in designing an effective system. There are several things to consider when planning the sensor locations.

IR Sensor

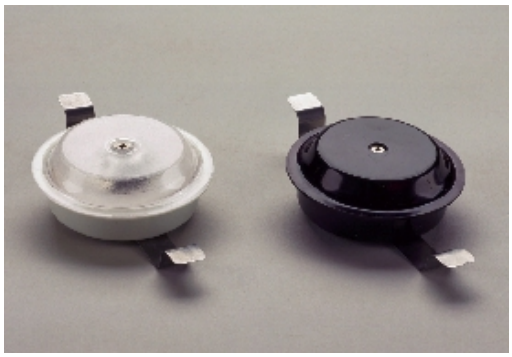

RF Sensor

3.2.1 Sensor Connection Length Limitations

The sensor wire runs can be up to 1000 feet in length from the Collector to the sensor. If the environment is known to be electrically "noisy," consider shorter line lengths for stronger signals and immunity to interference.

3.2.2 Infrared (IR) Sensor Location Planning

3.2.2.1 IR Sensor "field-of-view"

If an IR sensor is placed in a room with obstacles and reflections eliminated, the field of view of the sensor appears in the shape of six overlapping lobes forming a 15-foot radius.

Top view of sensors in a hallway

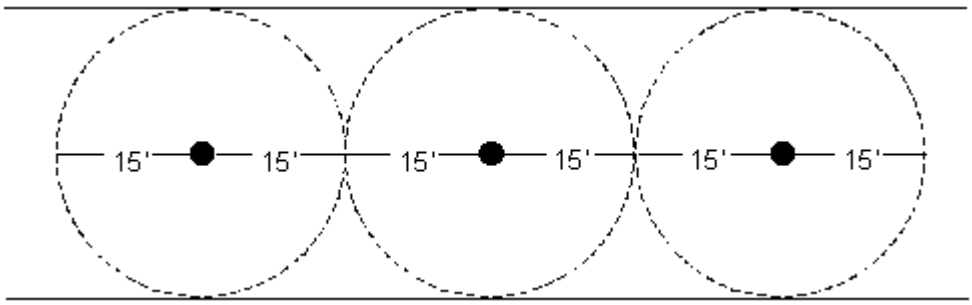

An IR sensor “sees” the environment under it in a largely predictable pattern. However, there are factors that can affect this field of view. The sensor is like an eye, which is sensitive only to a narrow spectrum of light, and the ID badge appears as a bright splash in an otherwise dark world to the sensor. Even if the badge is blocked from the view of a sensor, it can often be detected. The infrared light from a badge does not penetrate solid objects or bend around corners, but it does reflect off surfaces. This can sometimes be mistaken for “seeing around corners”. The effect of reflection can be used to advantage by the system designer, but can also pose problems for the unwary. Sensors have a given field of view when obstacles are not present, but the field of view of an installed sensor will vary due to room configurations.

A sensor may have a field of view that extends out of the designated area through a doorway or passage. This can cause badges to be detected incorrectly and reported to be in the room when only passing by. Place sensors near the middle of rooms, but offset from doors or entryways to prevent false detection. The position of a sensor can limit its view by placing it in a location where existing obstacles will block the unwanted sensor view.

Due to the line-of-sight nature of the infrared light created by the ID badges, it is also possible to apply masking to the sensor to limit or control the field of view by opening the sensor case and placing electrical tape over the receiver “eye” whose field of view needs to be blocked. However, proper placement is always the preferred method for controlling, rather than eliminating, sensor field of view.

3.2.2.2 Effective coverage of rooms

A single sensor placed near the middle of the ceiling can usually effectively cover an office or meeting room. Offices or rooms as large as 30 feet square are generally covered by a single sensor. The sensor should be located so that it has the best possible view of the room. If the room is very large or has a complex shape and no single sensor position will provide adequate coverage, multiple sensors will be needed.

3.2.2.3 Overlapping Sensors

Sensor overlap occurs when two (or more) sensors are placed so that their fields of view overlap. This will cause some indecision in the system if both sensors see a badge at the same time. The software will not change the location of a badge when it is in an overlap area unless the option to send duplicate hits is selected in the Badge Server software. If the option is selected, a badge may appear to bounce back and forth as long as it is in an overlap condition. This increases the traffic on the system and it is not recommended that the option be selected.

3.2.2.4 Sunlight interference

If the room has windows that allow a large amount of sunlight to enter the room, place the sensor in a position where the sunlight does not reflect directly into it from objects in the room. Sunlight can decrease sensor range and field of view if allowed to enter the sensor. Window tint films that block infrared (heat) energy greatly reduce this effect.

3.2.3 RF Sensor Location Planning

Planning the location of RF sensors depends upon the facility. In most cases, for complete coverage, they can be placed approximately 100' apart, because they have a sensitivity range radius of 50'. However, because concrete and steel structures absorb the RF signal, and other materials affect the strength of RF signals, testing is necessary to determine the best placement of RF sensors. In multi-floor facilities, it is desirable to stagger locations, i.e. do not place the one on the third floor directly above the one on the second floor, for better coverage.

3.2.4 Mapping the Sensor Locations on the Floor Plan

The sensor locations should be mapped out on a floor plan diagram of the facility. These are the locations where the sensor cable will be run. We suggest using a numbering scheme such as C1-1, C1-2, C1-3, C2-1, C2-2, C2-3 etc., where "C1" represents Collector 1 and "C2" represents Collector 2. Up to 24 sensors can be connected to one collector, although we recommend 20-22 to allow for future expansion. The wires should be labeled at both ends with these numbers, as well.

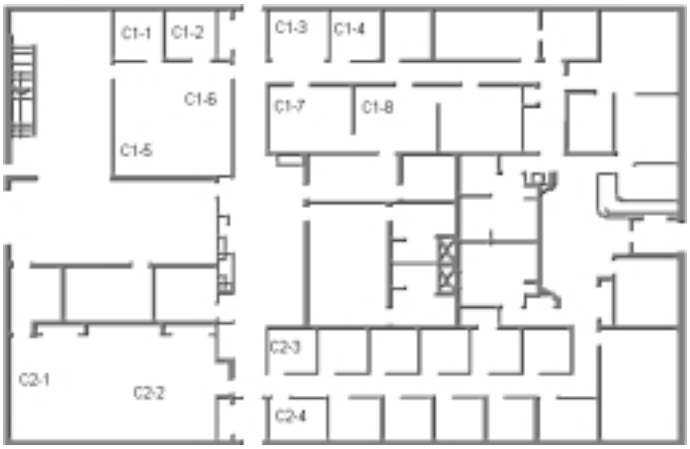

The facility should provide you with the names of the rooms. The room names will be used for configuring software. Once the sensors have been mapped with identification numbers, and the facility has provided a list of names of the rooms, complete the Punch-down Block Organization Chart with the number and the room name. You can also add the receiver numbers, which will be used for configuring the software. Number the receivers with incrementing numbers (1, 2, 3…). If there is more than one sensor in a particular area, they will have the same receiver number. See the example chart below.

Punch-down Block Wire Organization List

Building: ___Main Facility_____

Floor: __1st_____

Room #: ___Comm. Room 1_____

Collector #:_3265458142___

Collector alias __C1_____

Punch-down block pair	Cable ID	Wire Color	Zone description (room name)	Receiver #	Relay #	Verified
1	C1-1		John's Office	1		
2	C1-2		Bob's Office	2		
3	C1-3		Patient Room 120	3	0,1,2,3	
4	C1-4		Patient Room 122	4	4,5,6,7	
5	C1-5		Conference Room	5		
6	C1-6		Conference Room	5		
7	C1-7		Patient Room 121	6	8,9,10,11	
8	C1-8		Patient Room 123	7	12,13,14,15	
9	C1-9					
10	C1-10					
11	C1-11					
12	C1-12					
13	C1-13					
14	C1-14					
15	C1-15					
16	C1-16					
17	C1-17					
18	C1-18					
19	C1-19					
20	C1-20					
21	C1-21					
22	C1-22					
23	C1-23					
24	C1-24					

If there is more than 1 sensor in a room or area, you can give them the same receiver number.

There is a copy of this chart in section 6 that can be printed out for use. There will be one chart for each collector on the system. The chart for the next collector would have receiver numbers starting with the next incremental number from where this one left off. This chart will assist you with labeling the cable wires appropriately.

3.3 Use of Unauthorized Components

The VIS system integrates hardware and software to create a safe, reliable and efficient system. Use of components or connection to equipment not approved by the manufacturer is NOT recommended and **will invalidate any and all warranties**.

Approved third-party components include wire and connectors, terminal blocks, and other interconnection means only. Questions regarding the use of third-party equipment or components should be directed to your dealer for clarification ***before*** being connected to your system.

3.4 List of Materials

Installation activities require a minimum amount of materials, some of which may be purchased by the installer independent of Versus. For materials supplied by Versus, refer to the packing list and confirm that all listed hardware and wire can be identified. For installer-purchased material, insure that the remaining materials are available for the installation shown by the floor plan schematic diagram.

3.5 List of Tools

Some installation activities require special tools. Following is a list of recommended tools.

Tool	
Cable stripper	
Cordless Drill	
Diagonal Clippers	
Digital Multi-Meter	
Electric Screw Driver	
Ethernet Supplies	
Fishtape	
Hole Saw 2 3/8” Drill Attachment	
Level	
Mounting Screws	
Nut Drivers	
Paper/Pens	
Punch-down Block Tool-Type 66 or Bix,	
RJ-45 Testers	
RJ Connector Terminator Tool Kit	
Scissors	
Screwdriver Assortment	
Splice Crimp Tool	
Small Hammer	
Electrical Tape	
Tape Measure	
Twist Ties	
Utility Knife	
UY Connectors	
Vise grip Pliers	
Walkie Talkies (helpful for testing sensors)	
Weidmeuller Patch Check Plus	

Wire Strippers	

3.6 Safety and Code Considerations

Safety procedures and adherence to local building codes are the responsibility of the system installer. Versus products have been designed to be safe and reliable under the conditions in which they are intended to be used. The following sections detail those aspects of the system that might affect safety.

3.6.1 Equipment Handling

The components used in a typical installation contain internal circuits that are sensitive to static electricity. Static electricity transported by the human body may be strong enough to damage internal circuitry during installation. These components do not normally have exposed connector pins, but if handling with exposed connectors or pins is required, the installer should use an anti-static wristband connected to an electrical ground. This is especially important when temporarily disconnecting and reconnecting cables. The badges are the only system components that people can come in direct contact with. Therefore, cleaning the badges after each use is recommended. A badge should be thoroughly cleaned after each use, and wiped down with a disinfectant. The disinfectant should be alcohol-based, not water based.

WARNING!

Avoid touching bare contacts or connector pins when handling system components in order to prevent the accidental transfer of static to internal devices. Leave protective covers attached during installation.

3.6.2 Power Requirements

The components obtain low-voltage operating power from a local wall mounted “plug-in” transformer. Transformers provided with the systems are Underwriter Laboratory (UL) approved. No components use 120V AC line power directly, except the computer systems.

WARNING!

Do not attempt to connect or disconnect concentrators, collectors, sensors, or any other system components with power applied. The hardware may be damaged. Although damage will not occur in most cases, this practice is not recommended and may void equipment warranties.

Use of powering schemes not approved by the manufacturer will void equipment warranties.

As with any electrical equipment, safety is a prime concern. The system poses no safety hazard, since it uses only low-voltage DC power. However, installers must take adequate precautions to ensure that the low-voltage wires are not exposed to high-voltage electrical wires, and that wires run through ceilings and walls do not encounter dangerous electrical potentials and carry them to points where they might be exposed to human contact.

No powering device other than the plug-in units provided should be connected to the system without prior authorization from the manufacturer.

3.6.3 Grounding of Equipment

All points in a system installation are connected to a common “ground” via their interconnect wires. No attempt should be made to provide any additional earth ground or neutral connections to any sensor or collector. Adding ground connections to multiple points in a networked system may introduce

electrical system noises that will interfere with normal system operation. Consult the manufacturer if special grounding requirements must be met.

CAUTION: Allowing sensor or network conductors to encounter metal surfaces and structures, or allowing wires to be routed in close proximity to high powered equipment or devices will introduce electrical interference and may cause erratic operation and/or equipment failure.

3.6.4 Codes and Ratings of Materials Used

The materials used in the construction of individual components meet or exceed UL fire retarding requirements. However, not all these devices are rated for air plenum use. They are intended for utility closet mounting and must not be placed in airways or plenum areas, unless they can be housed in approved enclosures and sealed to meet local codes.

Installers must be aware of local fire and health codes in their selection of interconnect wiring. Plenum-rated wire and cable must be used where it will pass through breathable air spaces. Wire and cable rated for plenum use will be clearly marked. For information regarding plenum cabling, call Versus Technology, Inc. Manufacturing Department.

3.6.5 Workmanship

The following standards of workmanship must be followed during installation:

- National and local building codes must be followed.
- Tools used must be as recommended by the manufacturer, or approved equivalents.
- Connections must be made with manufacturer's recommended tools and procedures.
- Conductors must not be nicked nor wire strands cut during wire stripping.
- Wire bundles must be neatly dressed.
- Wire bundles must be spaced away from power cables and lighting.

4. System Hardware Installation

This section covers the installation of the system components. Before installing the hardware components, all planning should be completed as described in section 3.

4.1 Cable Installation

When installing sensor and network wiring, use normal telephone installation techniques. **Sensor wire runs should allow sufficient length to move ceiling tiles and to move sensors if needed.**

It is the responsibility of the installer to run all cables as indicated on the floor plan schematic diagram. Each cable must be labeled at both ends with the identification of the end device to which it is connected. Use the same numbering scheme for sensors as described in the previous section, referring to the Punch-down Block Organization List (C1-1, C1-2, C1-3, etc.). Label collector cables with the identification of the collector that it runs to down the collector chain, away from the concentrator.

4.1.1 Cable Types

Versus Technology recommends the following cable types for installing hardware components:

Sensor Cable	UTP CAT 3 is acceptable, Versus recommends CAT 5
Collector Cable	CAT 5
Ethernet Cable	CAT 5
Intercom Cable	7 cond. with drain, 26 AWG shielded cable

Approved equivalent cable types may be used.

4.2 Sensor Installation

Handle the sensors with care to not scratch or damage the casing.

WARNING!

Always disconnect power from the system before connecting or disconnecting components. Failure to do so may damage the equipment.

The UTP wire runs from the punch-down/collector to a sensor mounted in ceiling tile. Only a single pair of wire is required for each sensor. No grounding at the sensor is required.

Sensor installation calls for use of a splice connector at the sensor end of the cable run. Sensor wires have no polarity and can be connected to sensor wire-pairs in either order. In the case of 2-pair UTP cable, the same pair must be used at each end of the sensor run. It is suggested that the blue wire be used for consistency. Up to four sensors may be used on each CAT 5 cable if preferred, although using one cable per sensor makes troubleshooting easier.

To install and wire sensors:

1. Referring to the floor plan schematic diagram, identify sensor locations and verify identification numbers.

2. Create a hole for the sensor in ceiling tile or ceiling surface using a 2-3/8" hole saw.

3. Pull the sensor cable wire-pair through the hole and connect to the sensor using UY splice connectors.

4. Gently bend the spring steel clips upward and insert the sensor into the ceiling tile hole. The steel clips and the sensor cover will “sandwich” the ceiling tile and hold securely.

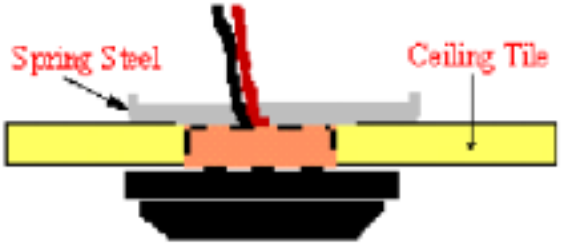

5. Mark the sensor as installed on the Installation Checklist.

4.3 Punch-down Block and Collector Installation

An example of neatly installed punch-down blocks, collectors, and concentrators.

Concentrators

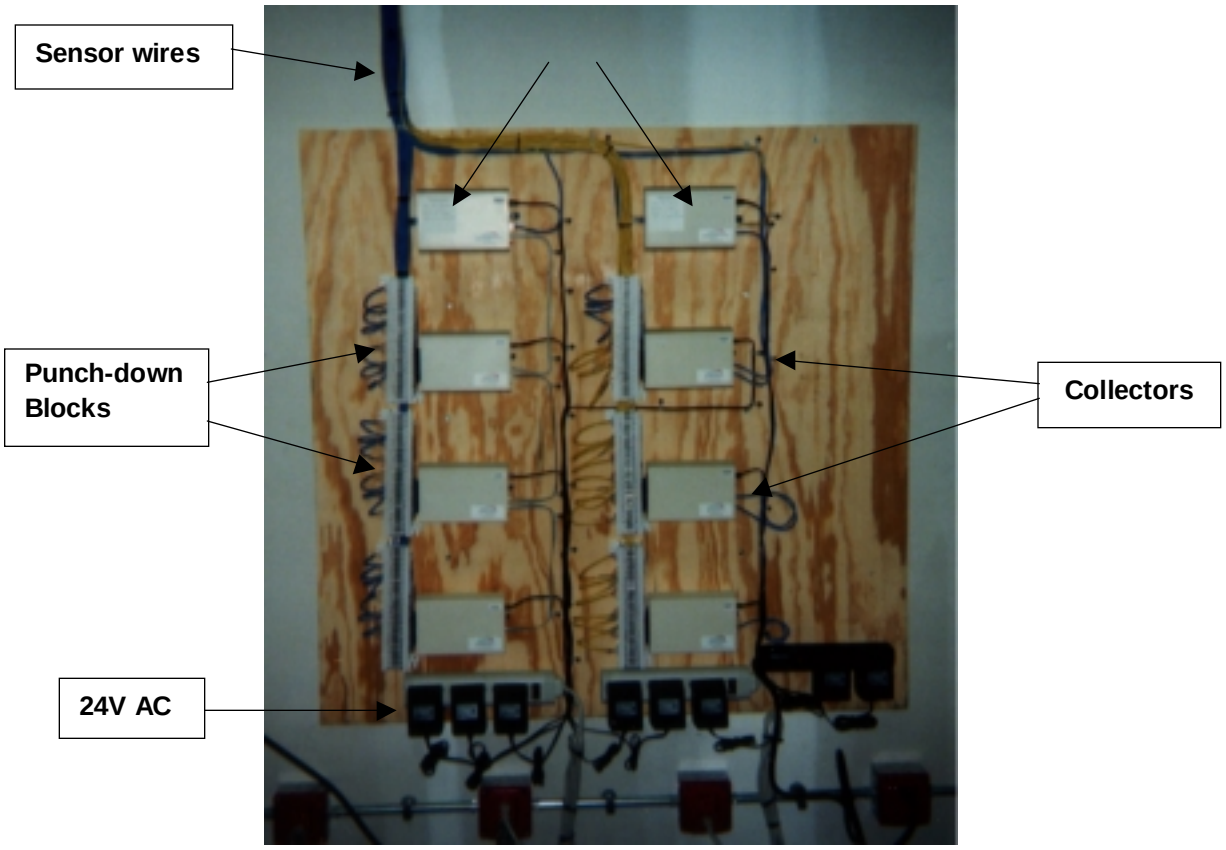

The punch-down blocks, collectors, and concentrators should be installed in a secure location, such as a communication or server room. The installation should allow for wiring access, neat wire routing and dress, and connection of any sensor wire-pair to any collector input. Neat and orderly punch-down blocks are easier to troubleshoot and maintain.

To install the punch-down blocks and collectors

Note: Make sure power is not supplied when connecting components.

1. Mount the punch-down block on the wall using appropriate wall-mount hardware.

2. Mount the collector adjacent and connected to the associated punch-down block, using the Velcro tape and clip provided with the unit. When using Velcro tape to secure a collector unit, make sure the solid metal end clip is firmly secure to prevent sagging of the connection between the collector and punch-down block.

4.4 Connecting Sensors to Collectors

Sensors are connected to the collectors through punch-down blocks. The punch-down block is organized so that each two punch-down block rows, starting at the top left of the block, are one collector port that is connected to by one sensor.

Bridge-clips are used to connect left-side pins to the right-side pins, which are wired to the collector unit. If patching of sensor inputs is required, jumpers can be used from any sensor wire-pair on the left to any collector wire-pair on the right.

Make sure power is not supplied when connecting components.

Punch-down Block

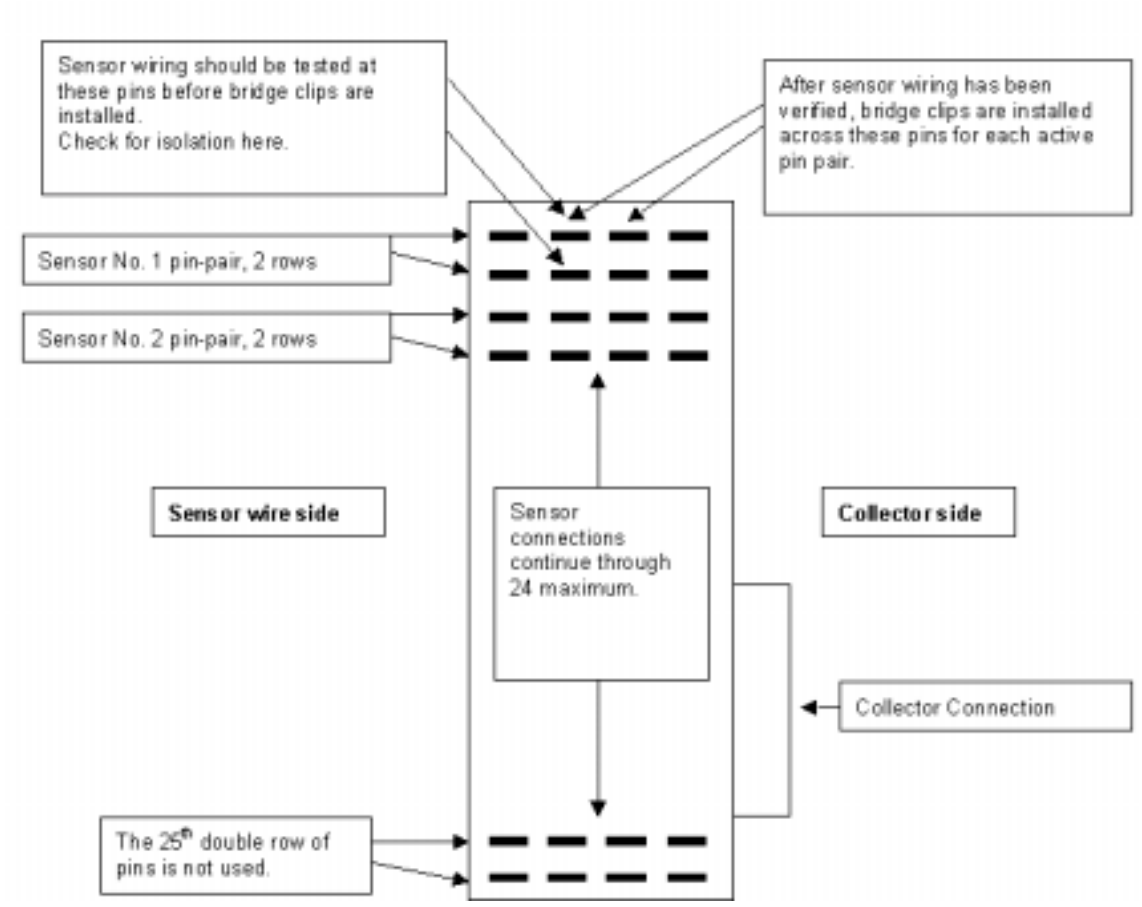

To connect the sensors to the punch-down block:

For connecting the sensor wires to the punch-down block, refer to the Punch-down Block Organization Chart for the location each wire should be connected on the block.

1. Remove all bridge clips from the punch-down block.

2. Referring to the Punch-down Block Organization List to make sure each sensor wire is connected to the correct position on the punch-down block, connect the sensor wire-pairs to the appropriate punch-down block pin-pair positions using the punch-down block tool.

3. Check isolation.

   This is necessary because in the course of interconnecting many sensors to a collector, it is not uncommon to make contact with a sharp metal edge, ganged knockout box, or electrical ground with one of the conductors. It is critical, however, that such accidental connections be located and cleared before applying power to the system. The effect of these accidental connections can range from mild to severe. In many cases, erratic behavior may be noted. In

some cases, equipment damage may occur. In any case, an electrical code violation has occurred.

To verify that the system is "isolated" from building and electrical grounds:

Note: It may be helpful to disconnect the collector from the punch-down block while this measurement is made. This will isolate the sensor wiring completely.

1. Use an ohmmeter or multimeter set to the 2K (2000)-ohm scale.
2. Clip one probe to the nearest electrical conduit, electrical ground, or metal water pipe.
3. Touch the other probe to each punch-down block row in turn.
4. Every row MUST indicate an infinite (open) connection. If this is not the case, the suspect line must be traced to find the accidental connection to the structure that has been made.

4. Once isolation has been checked, replace the bridge clips on the punch-down block.

4.5 Communication Room Check

There are several items that need to be verified before applying power to the system. Use the Communication Room Checklist in section 6 to check off each step as it is completed.

4.5.1 Checking the Collector Wiring

A visual check of the collector wiring should find the punch-down block secure and the collector unit connector firmly seated against the punch-down block connector. See the Collector Voltage Troubleshooting Flow Chart in section 5 Troubleshooting Guide, for checking the collector wiring.

WARNING!

Correct two-pair wiring is essential. Crossed or reversed pairs can cause equipment damage in some cases. Always test all wiring before connection of system power sources.

The collector network (2-pair) must be tested before the system power is applied to be sure that wires are not misconnected. Failure to thoroughly test the collector network wiring may result in equipment damage.

The concentrator and collector devices connect to the 2-pair wiring system using modular interfaces to allow for easy testing of the wiring before power is applied. It is recommended that installers be equipped with appropriate USOC cable testers as required to verify the polarity and validity of installed wiring.

Note that 3-pair USOC interconnections may also be used. In this case, the third pair (outermost) is used in parallel with the second pair to improve power distribution to the collectors.

4.5.2 Setting the "Last Unit" Switch on a Collector

When installing collectors, the collector network wires run from unit to unit in a daisy chain fashion. Each collector has a small switch for identifying the last collector on a line. It is very important that the collectors which are NOT at the end of the line have this switch set to the UNTERMINATED position, and that the collector which is at the end of the line has this switch set to the TERMINATED position.

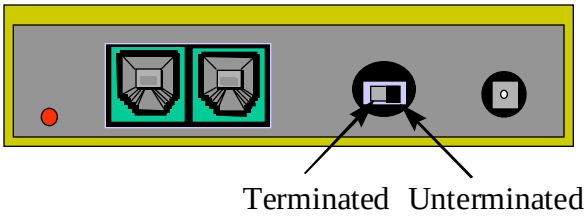

The reason for this is that with high speed digital data, it is critical that the electrical energy that runs down the wires is absorbed at the end and does not "bounce back" down the wire and cause interference with other data coming down. To exactly absorb all the energy coming down a wire, the wire must be ended at the last device in the chain with a resistor, which has value that equals the characteristic impedance of the wire. Each collector unit is equipped with such a resistor that is connected when the switch is in the TERMINATED position.

4.5.3 Power-up Test

Collectors are provided with a 24V power supply that **must** always be used for each collector, providing local operating power. No other power supply is adequate to power collectors. To ensure that the power supplies do not pull out by their own weight, either mount the power strip outlet side up or use wire ties to hold the power supply in place.

Power supply may become disconnected if power strip is mounted sideways.

If the power strip is mounted plug side up, the power supply will be firmly seated.

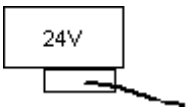

When the collector wiring and isolation have been verified and the cable connection between the concentrator and the collector has been tested and found correct, the next step is to apply power to the collector and check the sensor connections for the correct voltages.

To test sensor voltage

Once power has been applied to the collector, a voltmeter check should be made of the sensors on the punch-down block to verify that they are connected correctly.

1. Set the voltmeter or multimeter to a 20-volt range.

2. Apply the probes to each sensor connection on the punch-down block.

If the reading is:	For: (Sensor type)	Then:
Approximately 18 volts	RF only	the sensor is wired correctly.
<14 volts	IR and RF	There is radio frequency or electromagnetic interference.
Approximately 16 volts	IR only	the sensor is wired correctly.
Approximately 20 volts	IR and RF	there is no sensor connected to this pair or the wiring to the sensor is open.

Very low or zero	IR and RF	the sensor pair is shorted. (The 25th pair on the punch-down block is unused and will read zero volts.)

When voltmeter is applied to a sensor pair, a slight drop in voltage can be observed when the sensor is receiving a transmitting ID badge. This can be used to identify sensors in lieu of complete system operation.

3. Check RF interference by switching the meter to the AC scale and reading the voltage. With no badge transmitting over the sensor there should be < 0.1 VAC on a sensor pair.

Caution!

A shorted sensor pair will not cause immediate damage to the collector. However, if allowed to remain, some heating of collector components will occur, which is undesirable. If shorted pairs are found in the sensor voltage test, remove the collector power and resolve the short as soon as possible. If the system must be powered with the short unresolved, remove the punch-down block bridging clips to disable the disruptive sensor until the wiring can be repaired.

4.5.4 Collector Network Wiring Connections

4.5.4.1 Concentrator End Connections

The 2-pair collector network connects to the concentrator unit using a modular connection with an RJ-12 modular jack (6 wire). This provides a means to easily disconnect the collector network for testing of the 2-pair wires or for service of the collector unit.

4.5.4.2 Collector End Connections

The 2-pair collector network connects to the collector module via a modular connector with an RJ-12 modular jack (6 wire). A modular-to-modular jumper is then used from one collector unit to the next collector unit. This provides a means to easily disconnect the collector unit for testing of the 2-pair wires or for service of the collector unit.

4.5.4.3 Collector Wiring

The collector devices connect to the sensor network using modular interfaces to allow for testing of the wiring before power is applied. It is recommended that installers are equipped with appropriate cable testers to verify the polarity and validity of installed wiring.

There are two parallel RJ receptacles on each collector. This allows collectors to be chained together from their assigned concentrator to the last collector in the chain. A key indication of connector problems with the collector cable is the red indicator light on the collectors, which may indicate either reverse polarity or a short circuit. The red light will flash every time it sees a badge fire. A constant pattern of four or five flashes may indicate there is a problem with the connectors on the cable.

To wire collectors

Note: Do not make any connections to components unless indicated by a step in the procedure. Ensure that all bridge clips have been removed from the selected punch-down block/collector unit.

1. Refer to the contractual floor plan schematic diagram and identify the concentrator location.

2. Refer to the contractual floor plan schematic diagram and identify all collector locations.

3. Verify that each collector cable for each collector site and the concentrator site has been installed as indicated on the contractual floor plan schematic diagram.

4. Attach an RJ connector to each end of the collector cable.

5. Using the Weidmeuller Patch Check Plus test set or an equivalent model, perform the following steps to verify straight through continuity for each collector cable run:

   a) Plug one end of the cable into the receiver unit of the test set.

   b) Set the reset switch on the receiver unit to the “On” position.

   c) Plug the other end of the cable into the Transmitter unit of the test set.

   d) Set the reset switch on the transmitter unit to the “On” position. All the red LED’s will light followed by an audible squawk tone.

   e) Touch the TEST button on the transmitter. After a short delay, the transmit #1 LED will light with the corresponding #1 LED on the receiver scale

   f) Touch the TEST button again to light transmit #2 LED with its corresponding receiver #2 LED.

   g) Repeat this process until all conductors in the cable have been verified for continuity.

6. Mark the collector cable as checked on the Installation Checklist.

7. For each collector perform the following:

   a) For the collectors identified on the contractual floor plan schematic diagram as LAST, set the UNTERMINATED/TERMINATED switch to the TERMINATED position. For all other collectors, set the switch to UNTERMINATED.

   b) Insert the RJ plug(s) into the collector receptacle(s) (either collector receptacle is acceptable.)

   c) Mark the collector as installed on the Installation Checklist.

Collector RJ-12 Plug Wire Colors:

Plug Pin No.	CAT 5 Wire Color	Description	Voltage
1	NOT USED		
2	NOT USED		
3	White/Blue	Data (+)	+ 1 VDC
4	Blue	Data (-)	+ 1 VDC
5	White/Orange	Ground	0 VDC
6	Orange	Ground	0 VDC

NOTE: With connector pins pointing toward you, cable away from you, pin 1 is to the left.

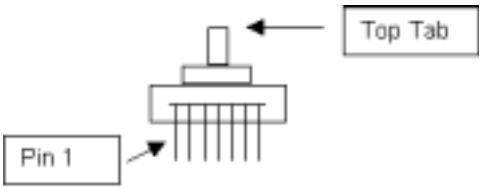

4.5.5 Concentrator Installation

The computer should be equipped with an appropriate network card for Ethernet Concentrator installation.

The Concentrator is a “table-top” box assembly, which can sit on a level surface or be mounted on any flat surface with mounting clips. Mount all concentrators as indicated on the floor plan schematic diagram.

4.5.5.1 Installing and Checking the Concentrator

The Concentrator power supply should be secured to the electrical outlet using a screw or other means to ensure that it cannot fall out or is disconnected by others working in the same area.

Caution!

Do NOT plug in the power supply cable until the installation wiring checks are completed. System damage could occur.

4.5.5.2 Network Wiring for Ethernet Concentrators

The Ethernet Concentrator requires CAT 5 four pair UTP cable runs between the network card in the computer and the Ethernet Concentrator. For multiple concentrators, install a 10Base-T or 10x100Base-T network hub or connect it to an existing Ethernet network within a facility. The Concentrator cannot be connected to a 100Base-T network hub. Like Collectors, Ethernet Concentrators use a 24V power supply. For more information on the Ethernet Concentrator, refer to the Ethernet Concentrator manual.

4.5.5.3 Power-up Test

When the wiring has been examined and the power supply voltage has been found to be in range, a power up of the concentrator may be performed to verify its operation.

Caution!

Disconnect the modular cable from any down channel collector(s) and allow it to remain unconnected during the test. Down channel collectors could be damaged if power is applied before they have been checked.

Plug the power supply connector into the concentrator and observed the red LED indicator lights. If it fails to light, recheck the power and connections.

There are four LED indicator lights on the Concentrator. The function of each is described in the diagram below.

Concentrator

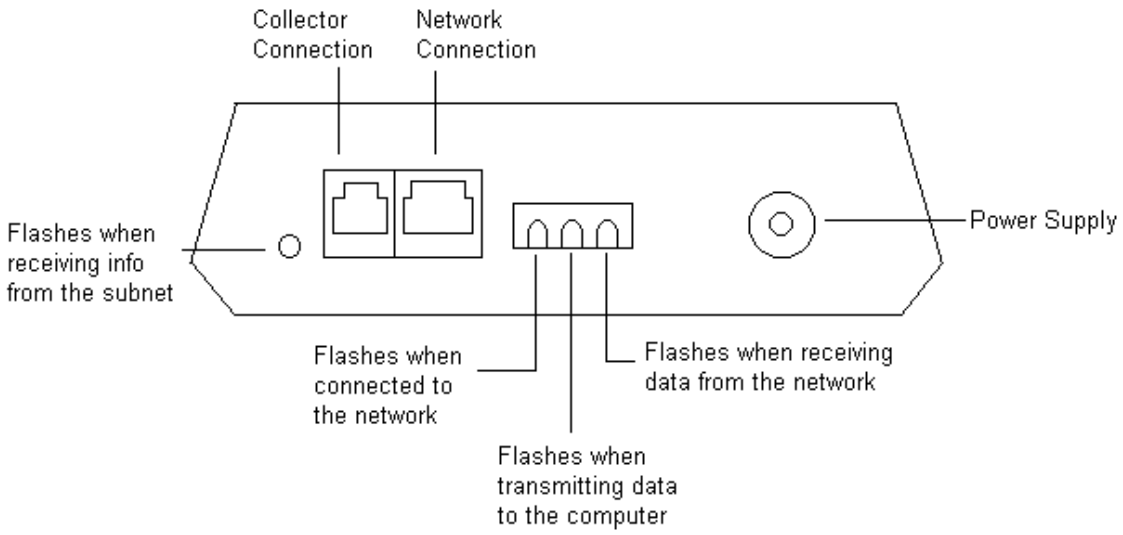

The LED indicator light on the **Collector** will blink every time it receives badge data from the sensors. If the LED blinks in a four or 5-blink pattern, this indicates that it is not communicating with the concentrator. If this is the case, there is a problem with either the network cable connection or the connection to the concentrator. If the LED blinks in a 3-blink pattern, this indicates a problem with the collector, and it should be sent to Versus Technology for repair.

4.5.5.4 Walking Setup Test

After the Database Server, Badge Server and Configuration Utilities have been installed, you should perform a walking setup of the system to verify sensor locations. The Ethernet Concentrator and Database Server Manual describes the installation and configuration of the Badge Server and Database Server. The Configuration Utilities Manual includes adding collectors, adding room locations, matching up the sensors with locations, and testing them with the walking setup.

4.6 Testing RF Sensors

The Frequencer is utility that shows data being received by sensors. Data can be filtered to show only information for a specific badge or sensor. The Frequencer is instrumental in testing that all areas of the facility are covered by RF sensors.

To test RF sensor coverage:

1. Open the Frequencer, which is installed to the Versus\IRTools directory. The file is TCPFreq.exe.

2. On the Frequencer screen, type the IP address of the computer where the Badge Server is installed.

   The badge hits will start appearing in the window.

3. To isolate and only test RF sensors, type the badge number of an RF badge in the **Badge** field.

4. Take an RF badge and "hide" the badge in a pocket or other place, so it is not seen by the IR sensors.

5. One person will need to sit at the computer while another person walks to all areas within the facility with the hidden badge. Both will need walkie-talkies to communicate.

6. Have the person with the badge walk around the facility and press the badge at different locations. You will see the hits in the **Total Time**, **Total Hits**, and **Avg. Time** fields.

7. Verify that the badge is seen in all locations by the RF sensors, especially areas such as bathrooms, where there may be no IR coverage.

8. Mark the area as covered on the Punch-down Block Organization List.

4.7 Perimeter Activation Sentinel (PAS) Unit Installation

If the Versus system includes PAS units, there are a couple options for mounting. You can place them above the ceiling tile if there is a suspended ceiling. If you choose this method, do not place the unit on the metal frame of the ceiling, but rather touching only the ceiling tile. Alternately, you can set the PAS unit on a shelf above the area where you need the signal range. The shelf must be non-metallic.

5. Troubleshooting Guide

These are possible hardware scenarios and solution issues that may affect the operation of the tracking system. The Collector Voltage Troubleshooting Flow Chart and the Functionality Test Flow Chart are included as troubleshooting strategies for correcting system hardware problems.

Problem: System will not start up.
Discussion: Most system failures on startup are caused by failure to properly crimp RJ Type connectors, along with failure to test the completed connection.

Problem: Collector cannot be seen by the Concentrator on the Subnet.
Discussion: A collector works properly when unconnected to the subnet, on powering on, it blinks four to five times every five or so seconds. Once connected to the concentrator's subnet, upon power on, the

collector light should come on strong after the first few seconds and then blink only upon receipt of a badge ID.

Problem: Incorrect voltages across sensor pair at the punch-down block.
Discussion: The voltage across the sensor pair at the collector punch-down block should be between 15 and 17 volts DC. A voltage above18 may indicate an open circuit, while a voltage below 15 may indicate RF interference, or faulty sensor, or faulty wiring. RF interference may be verified by switching the meter to the AC scale and reading voltage. With no badge id's being sent down the sensor pair, any AC voltage reading may indicate RF interference.

Problem: RF interference.
Discussion: RF interference may be checked as discussed above. Possible RF interference that effects the sensor network includes, certain types of energy efficient lighting and associated electronic ballasts. The most common offenders are classified as T8 lights and have and electronic ballast in the 40 kHz range. Sensor wiring should not touch electrical conduit, or ceiling grates, as they are very good at picking up RF frequencies.

Problem: Sensor not picking up id from badge (non-working sensor).
Discussion: Smoke detectors using IR detection interfere with Versus sensors. The sensor should not be installed within two feet of smoke detectors to avoid any interference.

Problem: Collector mounting failures.
Discussion: Collector mounting failures can be avoided by using the mounting clip provided to hold the end of the collector firmly against the wall.

5.1 Badge Battery Replacement

Warning! A low battery may affect system performance. Change low batteries at first indication.

Note: Static electricity can damage batteries. When changing badge batteries, it is critical to be grounded, such as by using a static strap and an Electro-Static Device mat to protect from any shock that would damage the battery or the badge.

The table below provides instructions on how to replace badge batteries. Remember to use a static strap and an Electro-Static tabletop mat when changing badge batteries.

Badge	Battery Type	Replacement Instructions
Locator Badge	Lithium, 3.5V 750 mAH	1. Place the Locator badge face down on an Electro-Static mat. 2. Locate the screw on the back of the badge. Using a small Phillips head screwdriver (or security screw driver), remove the screw and

		the back cover of the badge and flip it over to expose the battery. 3. Gently lift the battery from the board using your thumb and finger. 4. Insert the new battery into the lead holes. Replace the top cover and gently tighten the badge screw.
Personnel Badge	3V Lithium CR2477 950 mAH	1. Locate the screw on the back of the badge. Using a small Phillips head screwdriver (or security screwdriver), remove the screw and battery cover. 2. Remove the battery and replace with the new battery, making sure to pay attention to polarity, which is noted on the inside of the battery compartment cover. 3. Replace the battery compartment cover.

Collector Voltage Troubleshooting

Flow Chart

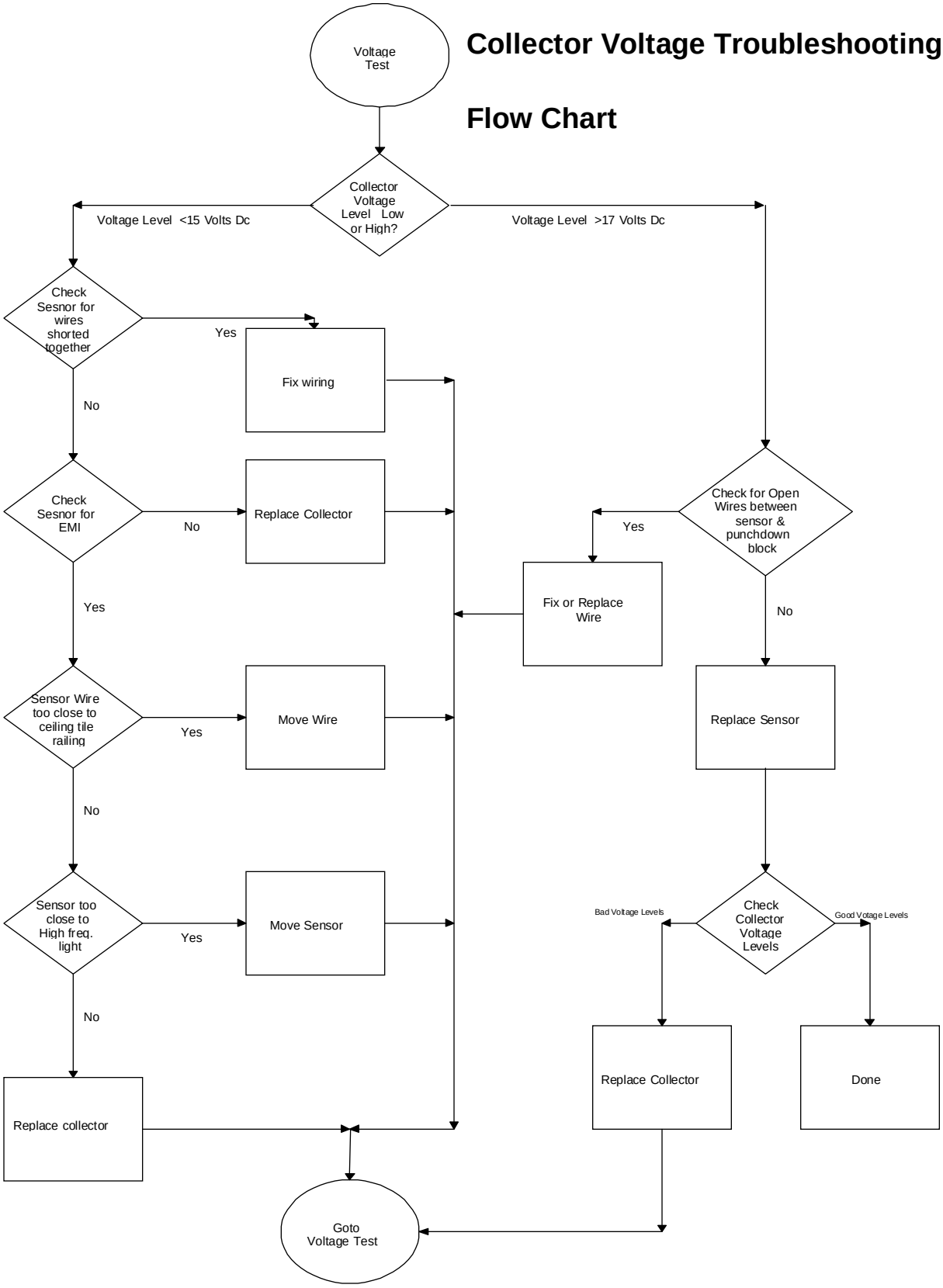

Functionality Test Flow Chart

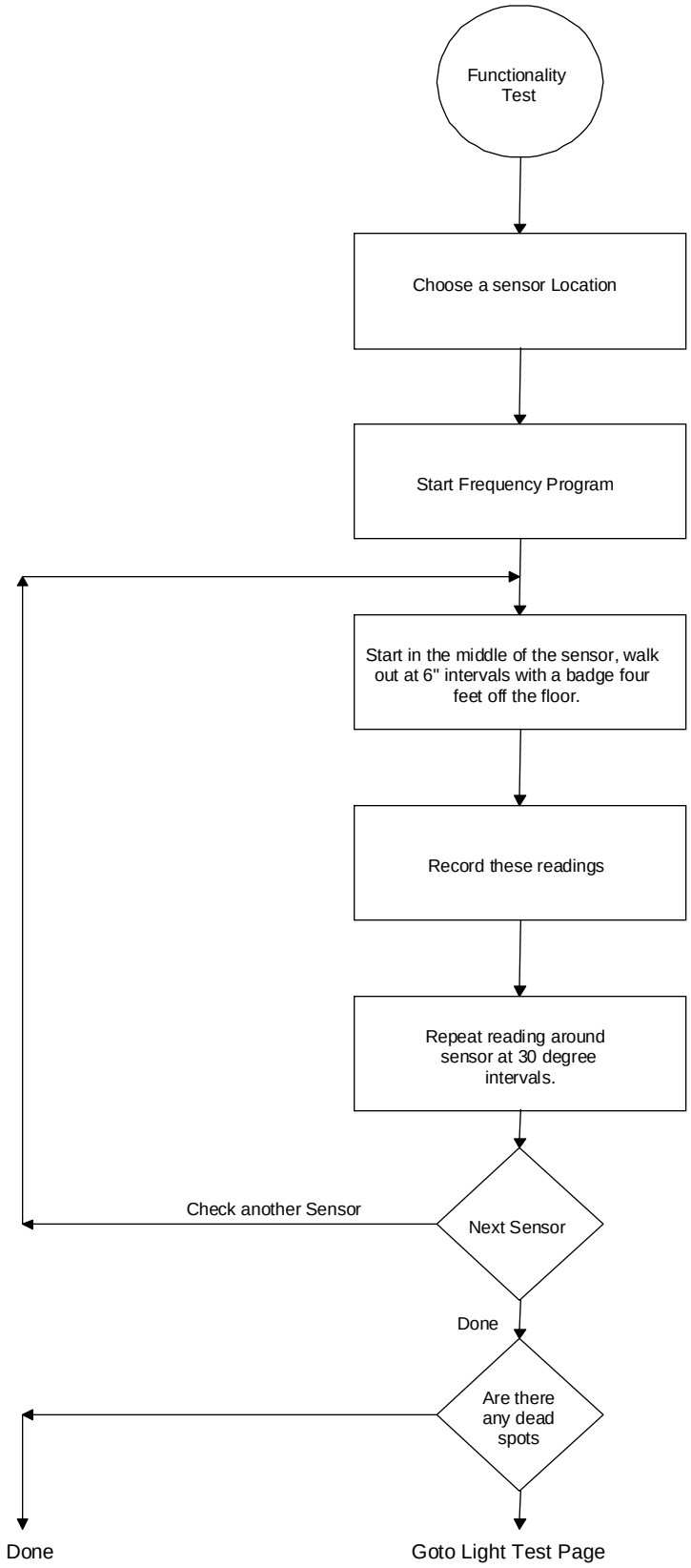

6. Installation Forms

This section includes forms for testing and installation purposes.

Forms

Installation Plan
Installation Checklist
Punch-down Block Wire Organization List
Communication Room Checklist
Preventative Maintenance Inspection Report
Final Verification

Installation Plan

Customer Name:_____
Customer PO #(s): _____
Sensors: _____ RF Sensors:_____
Collectors: _____ Room & Location Names Required
Ethernet Concentrators: _____ IP Address Required
Badges: _____ Qty: _____ ; _____ Qty: _____ ; _____ Qty: _____
Software:_____
_____

Additional Information: (i.e. badge drawer, focused sensors, relays…these require additional time)

Time Estimates:

1. # of installation days by contractor: _____
2. # of Verification days by Versus Technology _____ * crew size of ___ _____
3. # of Training Hours _____ * crew size of ___ _____
4. # of On-Site Configuration _____ * crew size of ___ _____
5. Total Versus Installation _____

Required: PO, Install Checklist, and Proposal/Quote

Floorplan(s): Sensor Placement Drawings

Installation: Begin Date___/___/____ End Date ___/___/___

Requirements for Installation:

	Room Keys
	ID Badges
	Support Contacts/Personnel w/phone #s 1. 2. 3.

Installers: Versus or outside contracting familiar with regulations

	Floorplan(s) to Installers with Wiring Specification and if needed site visit

Sensors, collectors, concentrators, wiring installed and mounted correctly

	Required facility sign off of contractors work

Versus Verification of installation work if required

	Communication Room Check List

Versus Computer Server Setup: # of Computers _____

Check	Requirements
	Jazz Drive
	Additional Hardware components:
	PC Anywhere Software
	Versus Software:

Facility Software & Hardware Requirements:

	Required Room/Location Names:
	Computer Room Location(s) for server(s):
	Phone line or TCP/IP routing services **Password Required:**
	IP Addresses for all network devices
	Software Client locations
	Develop Badge/Tag Types:

Network Requirements:

Identification of Computers	
Domain	
IP Address	
Subnet	
Default Gateway	
DNS Host Name	
DNS Domain	
DNS Services	
WINS Address	Primary Secondary Check: Enable DNS for Windows Resolution Uncheck: Enable LMHosts Lookup

On-Site Configuration

	System Hardware Testing completed see final installation Comm Room Checklist
	Software Setup: Configuration of Sensors & Room Names and Collectors
	Sensor Software Verification (Walk Around with Training)
	Using the Software Training
	Assigning Badges
	How to wear a badge
	How the system works training
	Who is responsible for the system communication i.e. where do I ask my questions
	How to change batteries option
	How to send back RMAs

Additional Planning: (Additional configuration or time issues)

Training

1. General Usage by End User - Low Level Training # 1
   - Different Views
   - Badge Assignment

Date	Who

2. Training for Supervisory trainers - Medium Level Training # 2
   - How the System Works / Components
   - Different View
   - Badge Assignment
   - Application Flows

Date	Who

3. Overall Key Operations for overall system administrator - High Level Training # 3
   - How the System Works / Components
   - Location of Hardware Components
   - Ethernet / Network Knowledge
   - Different Views
   - Configuration Utilities including Badge Assignment
   - Application Flow
   - Trouble Shooting
   - Backup Procedures
   - Clearing Out Logs
   - Overall System Maintenance

Date	**Who**

Final Customer Sign off:

Final Verification Check off required: see Final Verification sheet

Installation Checklist

The table and inspection report in this section will be used to indicate the completed installation and test of hardware and wiring. The installation codes will be as follows:
C = Cable checked I = Installed hardware
Make copies of the table and enter the numbers of the hardware as they are installed. Indicate a cable check completion with a "C" and a hardware installation completion with the "I" in each numbered cell of the table. The installer will be directed by the steps of the installation to make these entries as the checks and installation are made.
Copies of the entries should be kept with other installation documentation.

Item	**Versus P/N**	**Quantity**	**Hardware Installation**	**System Installation**
Sensor Cable 2 pair UTP plenum 24 AWG, solid				
Collector Cable 2 pair UTP plenum 24 AWG solid				
Intercom Module Cable 7 Conductor 26 gauge, stranded , shielded w/drain				
UY connectors				
UR connectors				
Network Cable				
Cable Labels				
Cable ties				
Sensors - High Frequency				
Sensor Mounting Brackets Optional				
Collector Kits				
Concentrator				
Intercom/ Speaker Units				
Channel for wire between Speaker Units				
RJ 12				
RJ 45 (for shielded cable use shielded RJ 45 connectors)				
Host Computer System				
Pager Computer System				
Audio Switch Matrix				
Remote Monitor (Optional)				
VGA Splitter (Optional)				
Magnetic Doorlocks (Optional)				
Doorlock Control Interface (Optional)				
Personnel Badges				
Equipment Badges				
Equipment Badge Cables - Bear33				
Equipment Badge Cables - PLV				
Equipment Badge Cables - Monaghan				
Equipment Badge Cables - Newport Breeze				

Equipment Badge Cables - MDE Escort				
P-Badge Labels				
E-Badge ID Code Labels				
Hardware Installation Manual & Drawings				
Software Licenses				
Software Backups				
--Some Optional--				
Sensor Splice Crimp Tool				
Punch-down Tool - Type 66				
RJ Connector Terminator Tool Kit				
Ethernet Connector Terminator Tool Kit				
Ethernet Supplies				
Electric Screwdriver				
Cable Stripper				
Screwdriver Assortment - Incl’ Small				
Nutdriver Assortment - Incl’ ASM Sizes				
Diagonal Clippers - Small & Large				
Digital Multi-Meter				
Utility Knife				
Flashlight				
Visegrip Pliers				
Small Hammer				
Cordless Drill				
2 3/8” Hole Saw				
Fishtape				
Center Punch				
Step-Drill				
Knock-Out Punch				

Punch-down Block Wire Organization List

Collector #_____

Collector Alias _____

Building: _____

Floor: _____

Room #: _____

Punch-down block pair	Cable ID	Wire Color	Zone description (room name)	Receiver/ Room #	Relay #	Relay Cable ID	Verified
1							
2							
3							
4							
5							
6							
7							
8							
9							
10							
11							
12							
13							
14							
15							
16							
17							
18							
19							
20							
21							
22							
23							
24							

Communication Room Checklist

Floor: _____ Location/Room #: _____

Check	Installation Verification
	Check Power Strip Mounting
	Check 50 Pin Connector Status to Punch-down Block
	Hub/Port Availability
	Network Cable installed/Continuity Test
	Ethernet Concentrator Administered
	Collector Voltage Testing ~ 15.5 to 16.9
	Collector Termination
	Collector Cabling
	Concentrator Room Label information

Optional

	Collector Layout Sheet
	Relay Unit Configuration
	Computer Setup and Hardware Configuration

Number of Collectors: _____

Powered up

C#	Identification #	Termination

Number of Ethernet Concentrators: _____

Port/Hub #	IP Address #	ID #

Additional Comments:	Fixed	Date

_____ _____

(Installation Person) (Date)

Preventative Maintenance Inspection Report

Customer _____ Customer Number_____ Date_____

Call Number_____

Equipment Serial Number _____ Software Revision _____

Configuration (✓)

___ Host Computer Setup

___ Collector Setup

___ Software Intellimotion 3-Pack

___ Pager Computer Setup (Optional)

___ Punch-down Block Configuration

___ Software Pager (Optional)

___ Work Station Computer (Optional)

___ Concentrator Setup (Optional)

___ Software Misc. (Optional)

___ Network Wiring

___ Sensors

___ Sensor Wiring

___ ASM (Optional)

___ ASM Audio Wiring (Optional)

Tools

1. Standard hand tools
2. Multimeter
3. RJ Tester 4, 6 & 8 Pins
4. Hardware & Software Manuals
5. ESD Mat and Wrist Strap

Visual Inspection (✓)

Inspect the following for excess wear and/or any visual signs of damage.

1. ___ General
2. ___ Computers
3. ___ Concentrator Mounting
4. ___ Reseat socketed Components/connectors
5. ___ Connectors
6. ___ Sensor Mounting
7. ___ ASM Mounting
8. ___ Cable insulation
9. ___ Collector Mounting

Cleaning (✓)

1. ___ Clean all internals of dust
2. ___ Clean external surfaces
3. ___ Clean ASM Area
4. ___ Clean Sensor Work Area(s)
5. ___ Clean ASM Work Area(s)
6. ___ Clean All Computer Stations
7. ___ Clean Infrared Tag

Calibration (✓)

1. ___ N/A

Electrical Safety Checks (✓)

1. ___ Wall Receptacle Test
2. ___ Sensor Voltage Test
3. ___ Collector RJ Line Continuity Test

Checkout Procedure (✓)

System

___ Connections Sensor/ASM

___ Display

___ Intercom Modules

Computers

___ Software Setup

___ Startup and Restart

___ PC Anywhere & Modem

___ Network

Concentrator

___ Connection between Computers and Network (Optional)

Collectors

___ Wiring Punch-down

___ Mounting

___ Random flashing Red LED

Sensors

___ Sensor Test Software

___ Voltage Check

___ Software Move Test

ASM

___ LED Power ON

___ Intercom Connections

___ ASM Test Software

Battery Install

___ Battery Installation

___ Tracking on System

___ Activates Page (Optional)

Backups

___ Backup Data from Computer Install

Training

___ Completed

Final Verification

Final verification and sign off for: _____

Primary responsible party: _____ _____
(Name) (Signature)

PO Verification	Check
1. The hardware components: Collectors _____, Ethernet Concentrator ____, Sensors & Wiring _____ and computer(s) _____have been installed and are acceptable	
2. Training on backup procedures and preventive maintenance including battery replacement has occurred to appropriate responsible party (see below # 7)	
3. Software CD has been issued and installed and clients are acceptable	
4. Software & Hardware documentation have been issued and explained	
5. Support & Trouble Shooting have been covered (see #6 below)	

6. Training has occurred to appropriate personnel and everyone is aware of their current responsibilities: _____ _____
(Primary Responsible Party) (Signature)

7. Customer's Designated Support Contacts
   a. System administrator:

   _____ _____ _____
   (Name & Title) (Phone #) (E-mail)

   b. Support contact:

   _____ _____ _____
   (Name & Title) (Phone #) (Email)

8. The Versus System is working correctly according to contractual agreement

_____ _____ _____
(Primary Responsible Party) (Signature) (Date)

_____ _____ _____
(Versus Representative) (Signature) (Date)