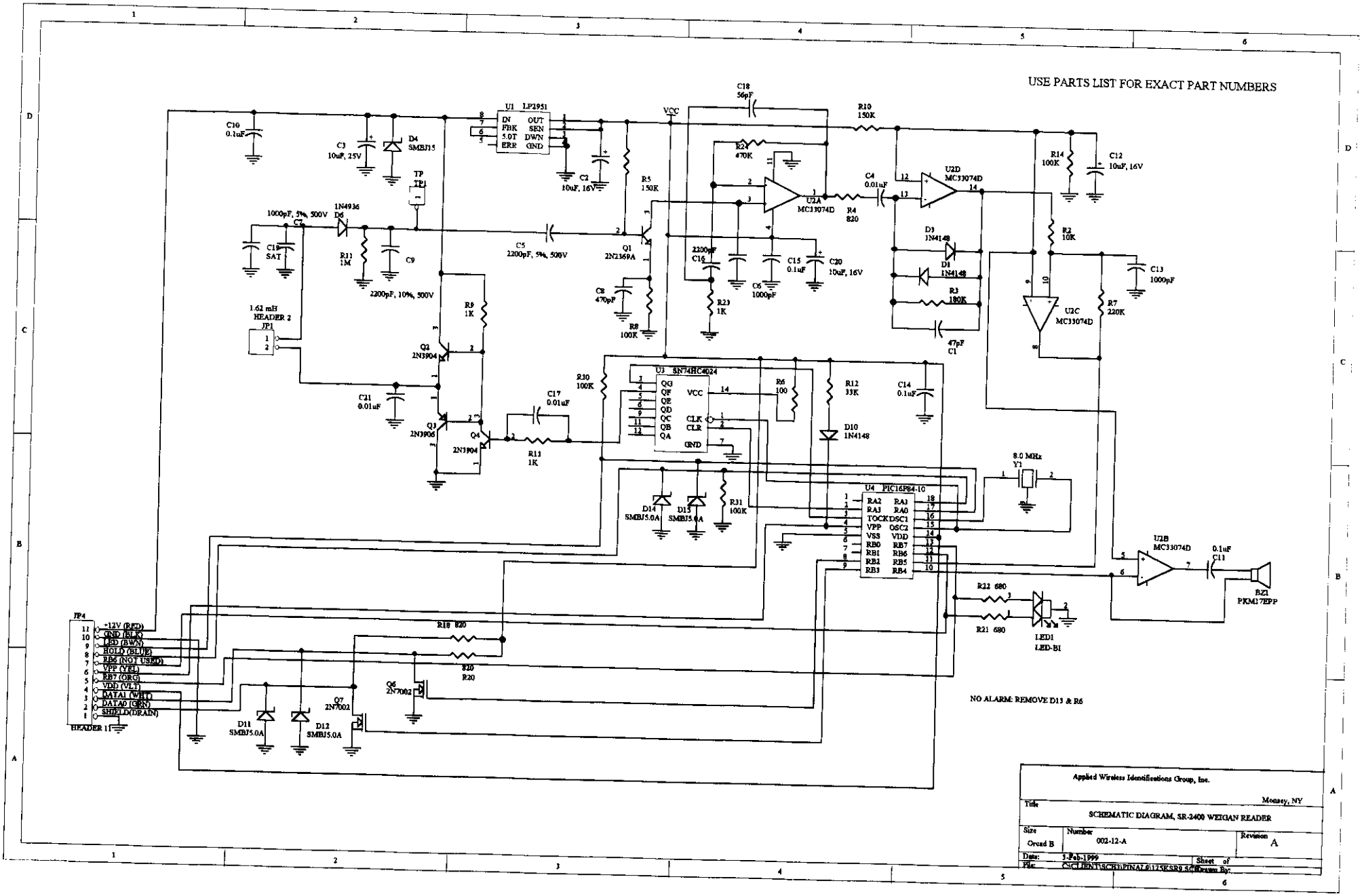
USE PARTS LIST FOR EXACT PART NUMBERS
U1 LP2951
IN OUT
FBK SEN
5.0T DWN
ERR GND
C10 0.1uF
C3 10uF, 25V
D4 SMBJ15
TP TP1
C2 10uF, 16V
R5 150K
VCC
C18 56pF
R10 150K
R22 470K
U2A MC33074D
R4 820
C4 0.01uF
U2D MC33074D
R14 100K
C12 10uF, 16V
1000pF, 5%, 500V C7
1N4936 D6
C19 SAT
R11 1M
C9 2200pF, 10%, 500V
C5 2200pF, 5%, 500V
Q1 2N2369A
C8 470pF
R8 100K
2200pF C16
R23 1K
C6 1000pF
C15 0.1uF
C20 10uF, 16V
D3 1N4148
D4 1N4148
R3 180K
47pF C1
R2 10K
C13 1000pF
U2C MC33074D
R7 220K
1.62 mH HEADER 2 JP1
R9 1K
Q2 2N3904
C21 0.01uF
Q3 2N3906
Q4 2N3904
C17 0.01uF
R13 1K
R30 100K
U3 SN74HC4024
QG QF QE QD QC QB QA
VCC CLK CLR GND
R6 100
R12 33K
C14 0.1uF
D10 1N4148
8.0 MHz Y1
U4 PIC16F84-10
RA2 RA3 TOCKI VPP VSS RB0 RB1 RB2 RB3
RA1 RA0 OSC1 OSC2 VDD RB7 RB6 RB5 RB4
D14 SMBJ5.0A
D13 SMBJ5.0A
R31 100K
U2B MC33074D
0.1uF C11
BZ1 PKM17EPP
R22 680
R21 680
LED1 LED-BI
JP4
+12V (RED)
GND (BLK)
LED (BWN)
HOLD (BLUE)
RB6 (NOT USED)
VPP (YEL)
RB7 (ORG)
VDD (VLT)
DATA1 (WHT)
DATA0 (GRN)
SHIELD(DRAIN)
HEADER 11
R18 820
820 R20
Q6 2N7002
Q7 2N7002
D11 SMBJ5.0A
D12 SMBJ5.0A
NO ALARM: REMOVE D13 & R6
Applied Wireless Identifications Group, Inc.
Monsey, NY
Title
SCHEMATIC DIAGRAM, SR-2400 WEIGIAN READER
Size Orcad B
Number 002-12-A
Revision A
Date: 3-Feb-1999
Sheet of
File:
Drawn By: