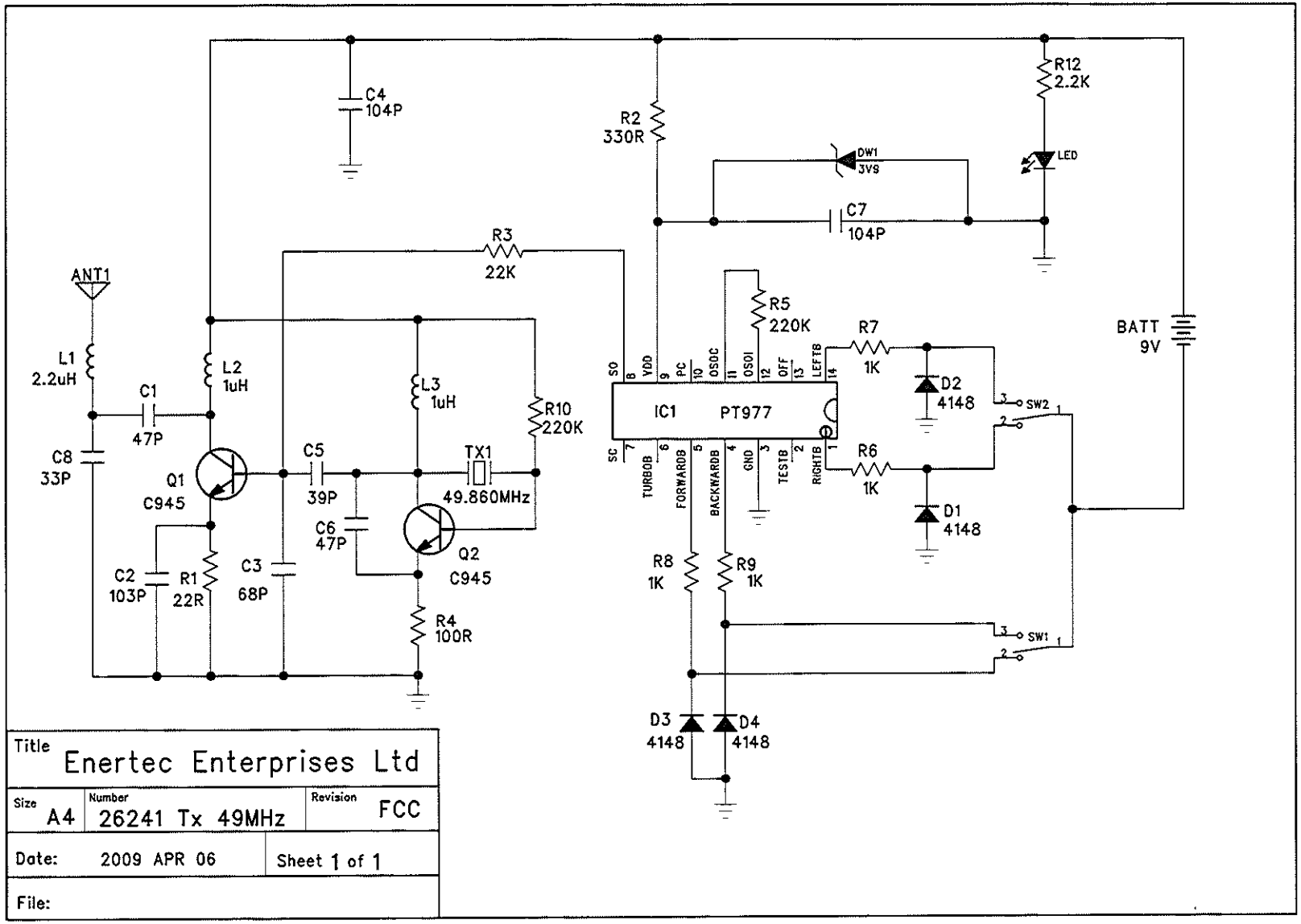

Title	Enertec Enterprises Ltd	
Size A4	Number 26241 Tx 49MHz	Revision FCC
Date: 2009 APR 06	Sheet 1 of 1	
File:		