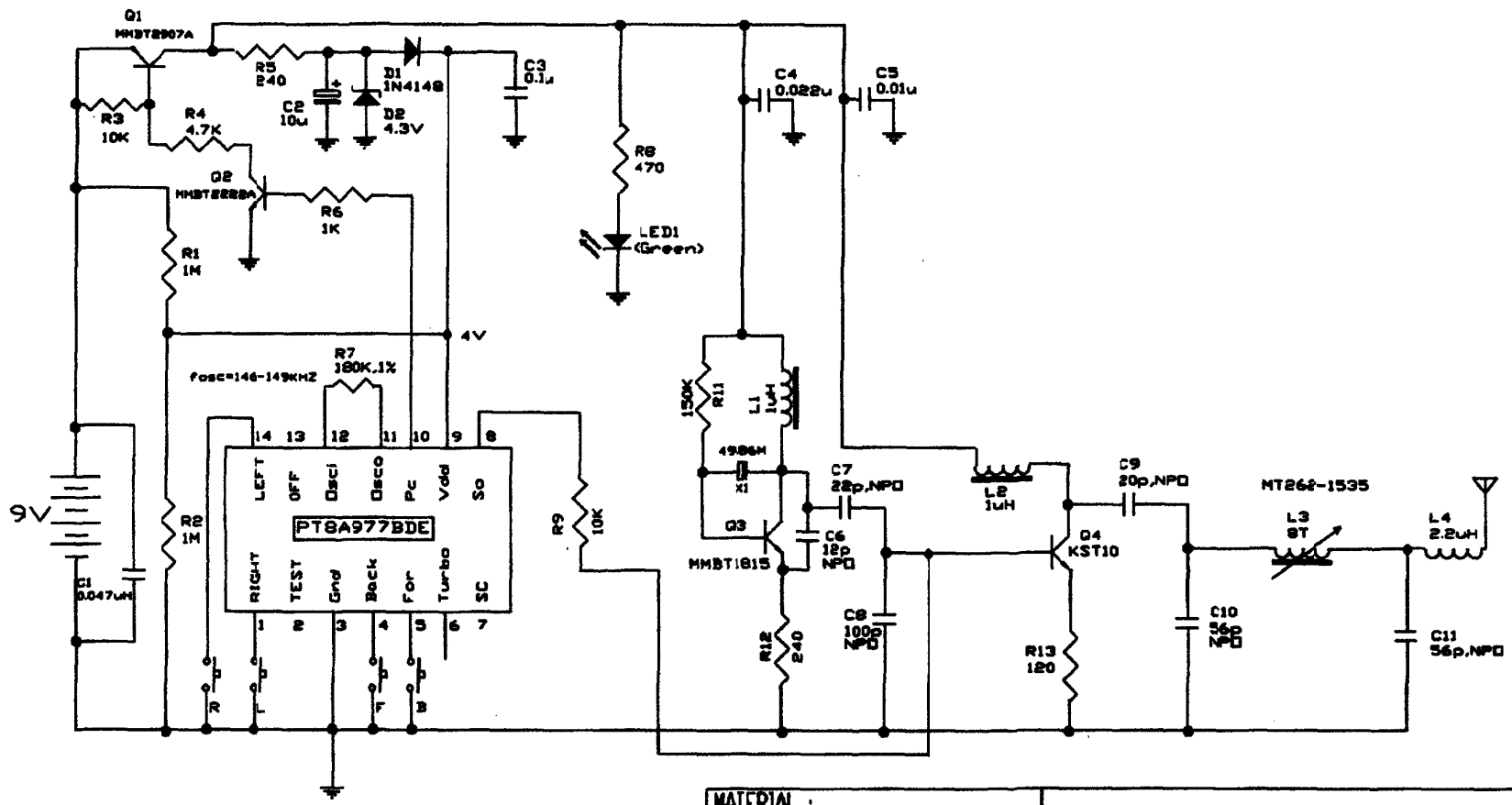

MATERIAL : /		G.concept
FINISH : /		TITLE : [redacted] Circuit Diagram [redacted]
APPROVAL	DATE	PROJ. NAME : 1632 - Twin Pack Micro Charger
DWN. :		PART NO. : /
CHK. :		DRG. NAME :
APP. : KELVIN LEUNG	10 JULY 2003	DRG. TYPE : CIRCUIT_DIAGRAM
DO NOT SCALE DRAWING		SHEET : 1 OF 1

REV. 1

THIS DRAWING, CIRCUIT DIAGRAM AND DESIGN CONCEPT BELONG TO G.CONCEPT. DUPLICATION, APPLICATION AND REWRITE SHOULD BE UNDER AUTHORIZATION OF G.CONCEPT.

1632 TX Schematic & Layout 2.tif (5100 x 7014 x 1)