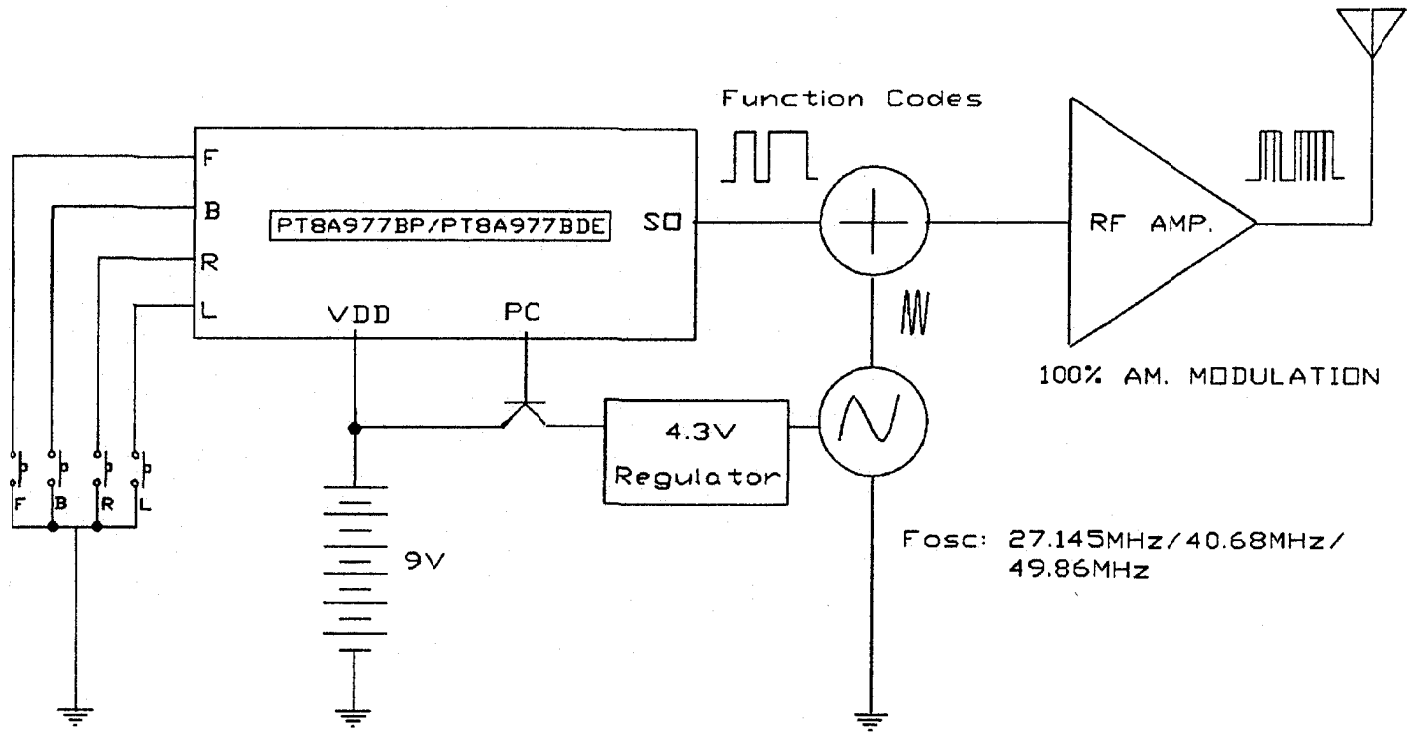

MATERIAL: /		G.concept
FINISH: /		TITLE: TX Functional Block Diagram
APPROVAL	DATE	PROJ. NAME: 1632 - Twin Pack Micro Charger
DWN.:		PART NO.: /
CHK.:		DRG. NAME:
APP.: KELVIN LEUNG	30 JULY 2003	DRG. TYPE: BLOCK_DIAGRAM
DO NOT SCALE DRAWING		SHEET: 1 OF 1

REV. 0

THIS DRAWING, CIRCUIT DIAGRAM AND DESIGN CONCEPT BELONG TO G.CONCEPT. DUPLICATION, APPLICATION AND REWRITE SHOULD BE UNDER AUTHORIZATION OF G.CONCEPT.

1632 TX Block Diagram.jpg (1275 x 1753 x 24)