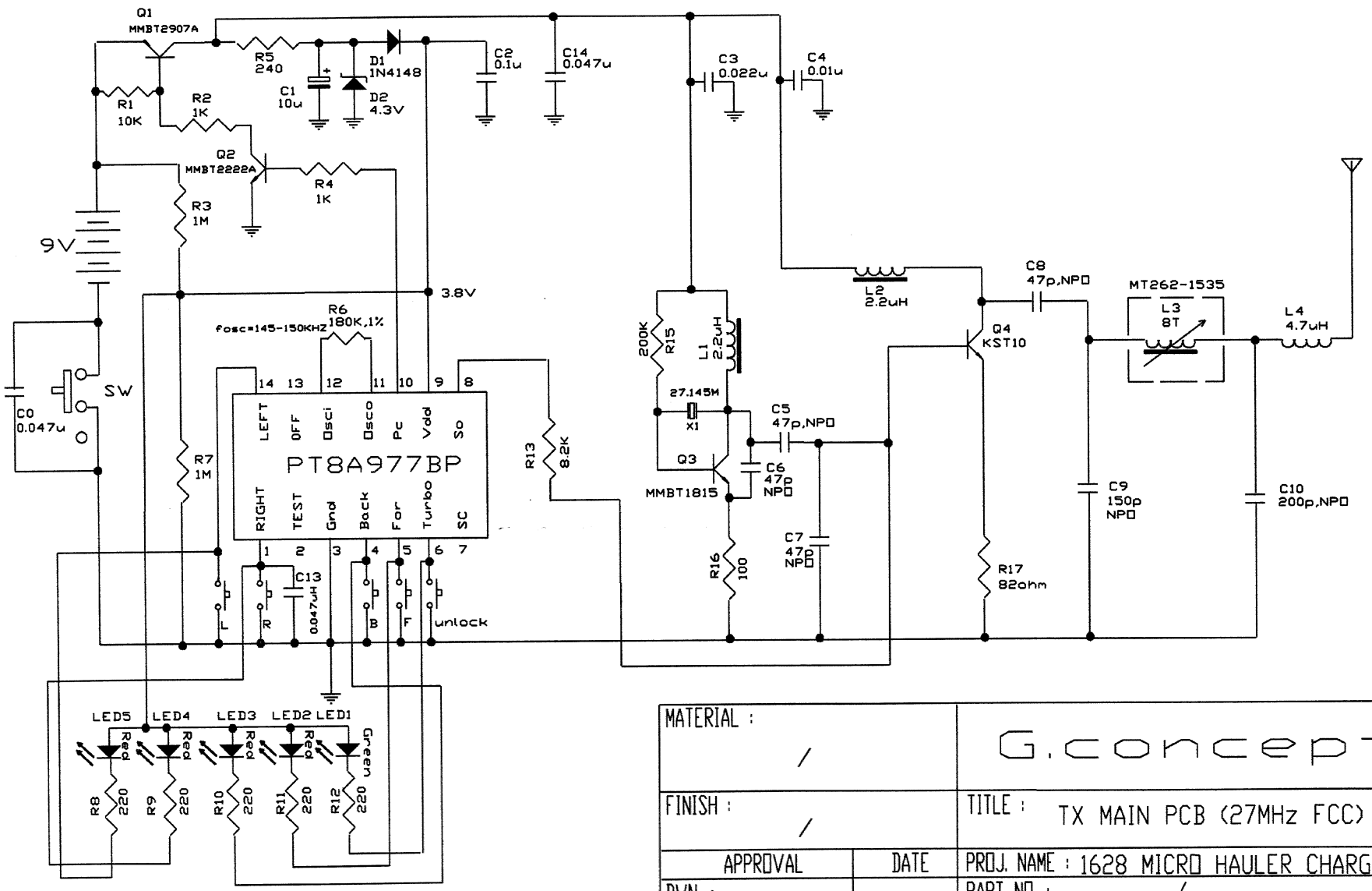

MATERIAL : /		G.concept
FINISH : /		TITLE : TX MAIN PCB (27MHz FCC)
APPROVAL	DATE	PROJ. NAME : 1628 MICRO HAULER CHARGER
DWN. :		PART NO. : /
CHK. :		DRG. NAME :
APP. : KELVIN LEUNG	29 AUGUST 2003	DRG. TYPE : CIRCUIT_DIAGRAM
DO NOT SCALE DRAWING		SHEET : 1 OF 1

REV. 0

THIS DRAWING, CIRCUIT DIAGRAM AND DESIGN CONCEPT BELONG TO G.CONCEPT. DUPLICATION, APPLICATION AND REWRITE SHOULD BE UNDER AUTHORIZATION OF G.CONCEPT.