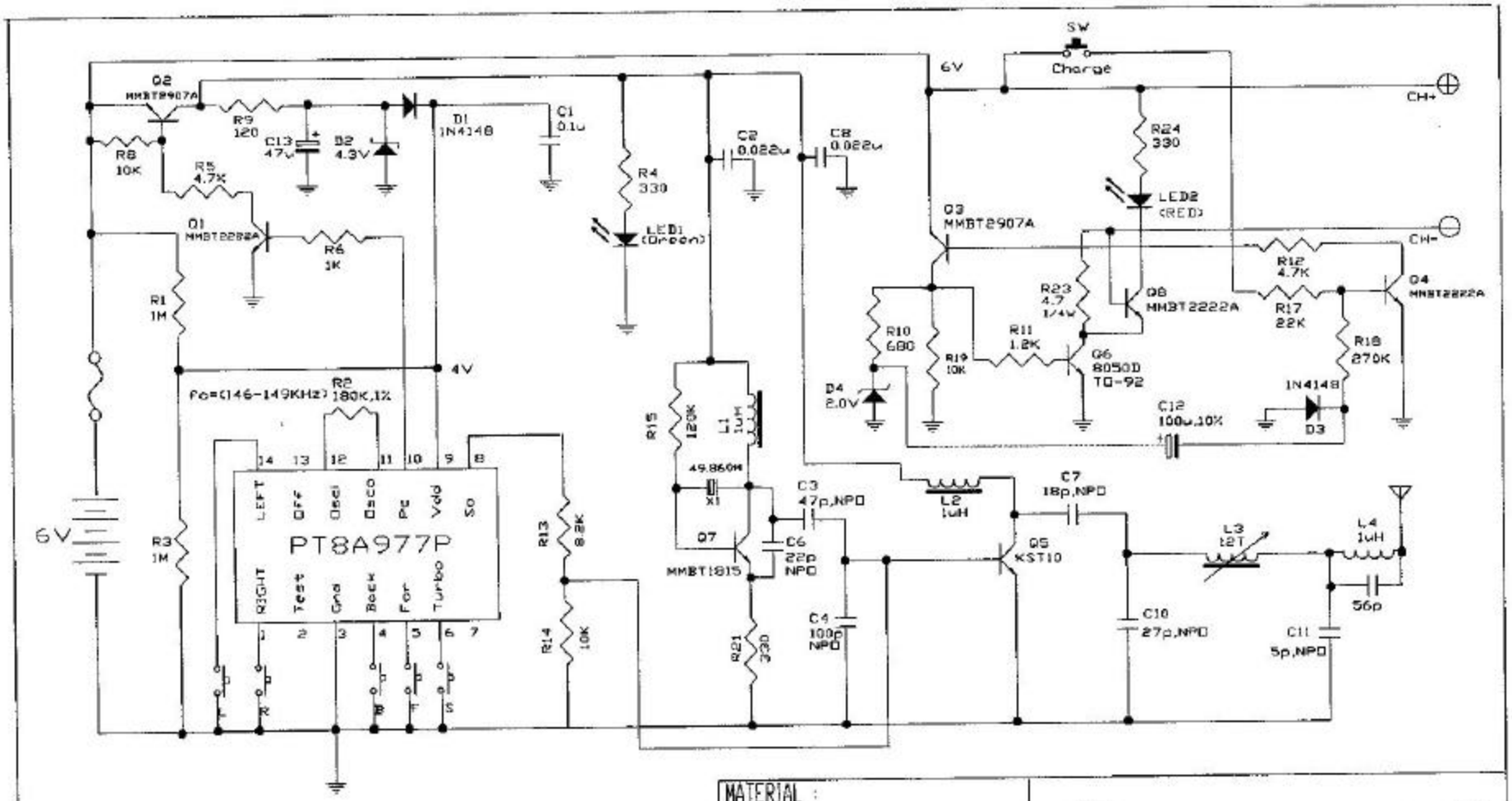

MATERIAL : /		G.concept	
FINISH : /		TITLE : TX Handset (49MHz)	
APPROVAL	DATE	PROJ. NAME : Micro Super Charger	
DWN. :	27 JULY 2002	PART NO. : /	
CHK. :		DRG. NAME :	ACAD
APP. :		DRG. TYPE : CIRCUIT_DIAGRAM	
DO NOT SCALE DRAWING		SHEET : 1 OF 1	REV. 2

THIS DRAWING, CIRCUIT DIAGRAM AND DESIGN CONCEPT BELONG TO G. CONCEPT CO. DUPLICATION, APPLICATION AND REWRITE SHOULD BE UNDER AUTHORIZATION OF G. CONCEPT CO.