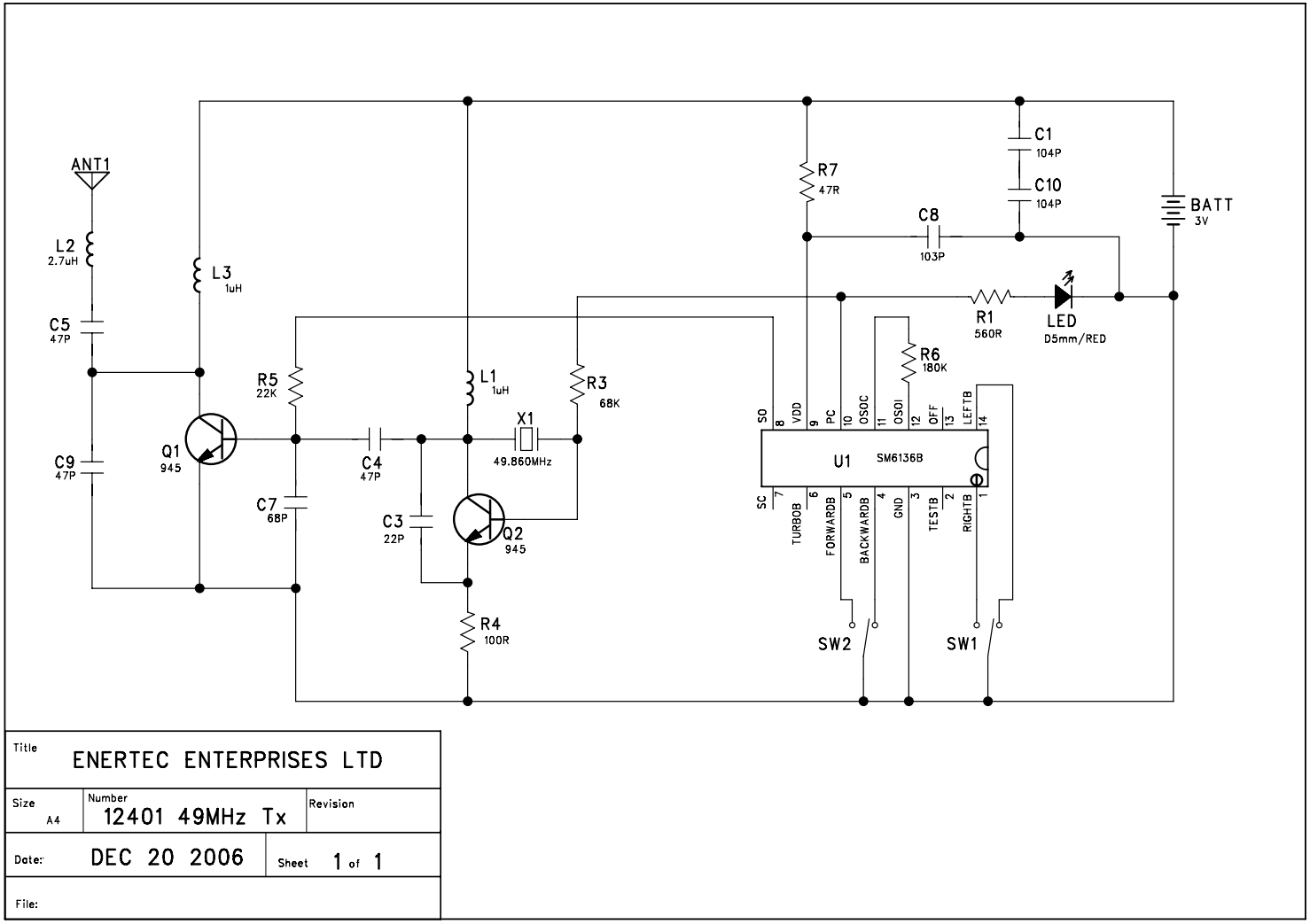

Title	ENERTEC ENTERPRISES LTD		
Size A4	Number 12401 49MHz Tx	Revision	
Date: DEC 20 2006		Sheet 1 of 1	
File:			