MODIFY RECORD			
REV:	DESCRIPTION	APPROVED:	DATED:

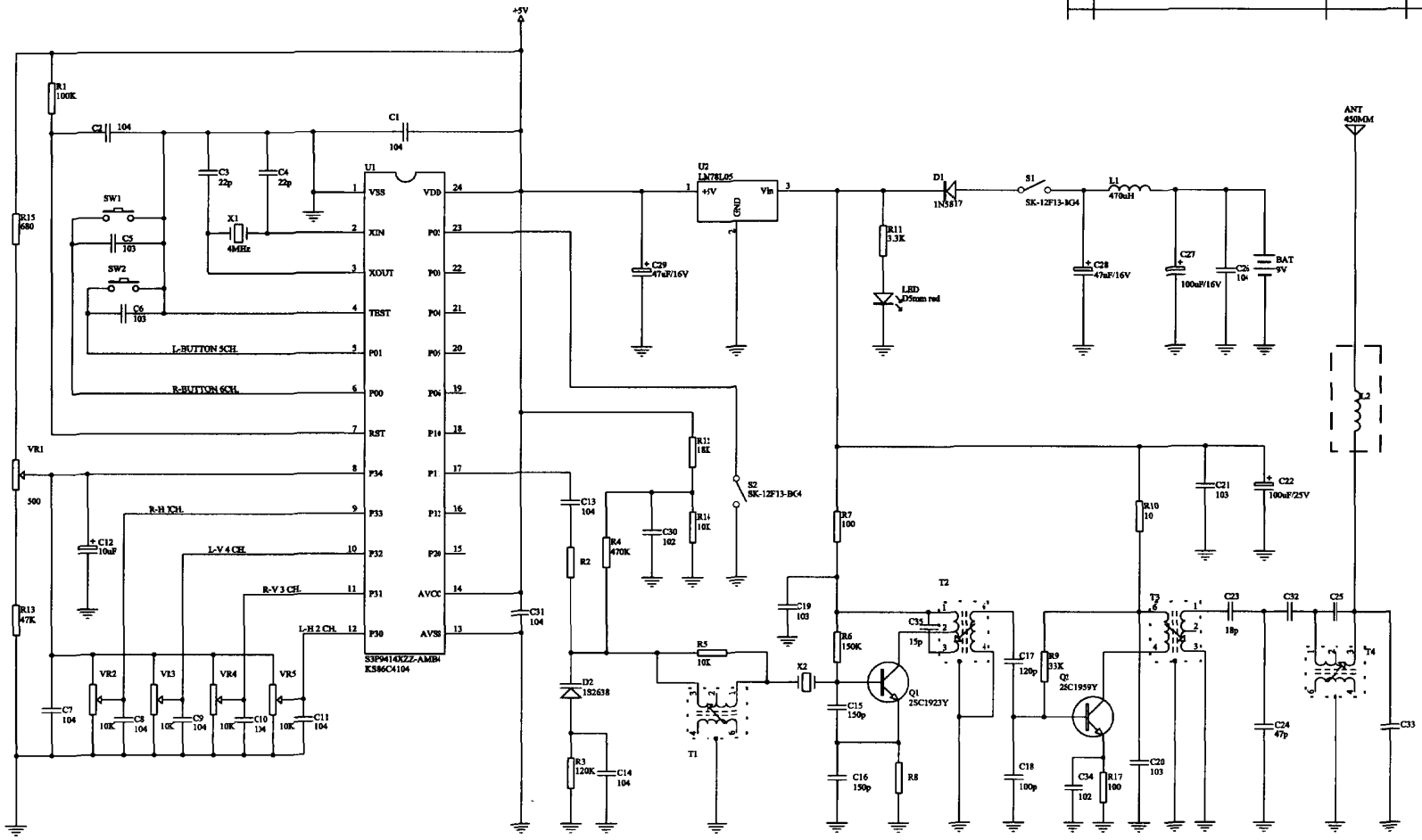

No. / Band	T1	T2			T3			T4	
	1-3	1-2	2-3	4-6	1-3	2-3	4-6	1-3	4-6
27MHz	27T	4T	12T	2T	10T	4T	2T	9T	NC
49MHz	14T	2T	4T	1T	5T	2T	1T	5T	2T

Component parameter table:

Freq.	R8	L2	R2	C35	C25	CH1	CH2	CH3	CH4	CH5	T1	T2	T3	T4	C32	C33
27MHz	470	4.7uH	100K	15p	18p	27.085MHz	27.125MHz	27.165MHz	27.205MHz	27.245MHz	049R	153R	126R	124R	47p	68p
49MHz	330	1.0uH	470K	Open	8p	49.840MHz	49.860MHz	49.880MHz			4921	B49	125R	062R	33p	Open

FREQ. TABLE:

COMPANY:	LUNG CHEONG TOYS LIMITED
TITLE:	遥控飞机TX (49MHz&27MHz)
FILE NAME:	C:\pads\B87\B87TXFCC.DDB - Documents\B87TXFCC.Sch
MODEL: B87	DRAWINGNO.: DZ01-000B87-0;
DRAWN: Z.W. ZHOU DATED: 6-Dec-2001 16:21:42	CHECKED DATED: / APPROVED: DATED:
SHEET: 1 OF 1	SIZE: A1 / REV: 1.0