Rev No.	Comments	Rev No.	Comments
00.X0	Initial Drafts	03.00	E3 Build
01.00	E1 Build	03.1X	Preproduction Builds
01.X0	Working Changes	03.30	Production Builds
02.00	E2 Build		
02.X0	Working Changes		

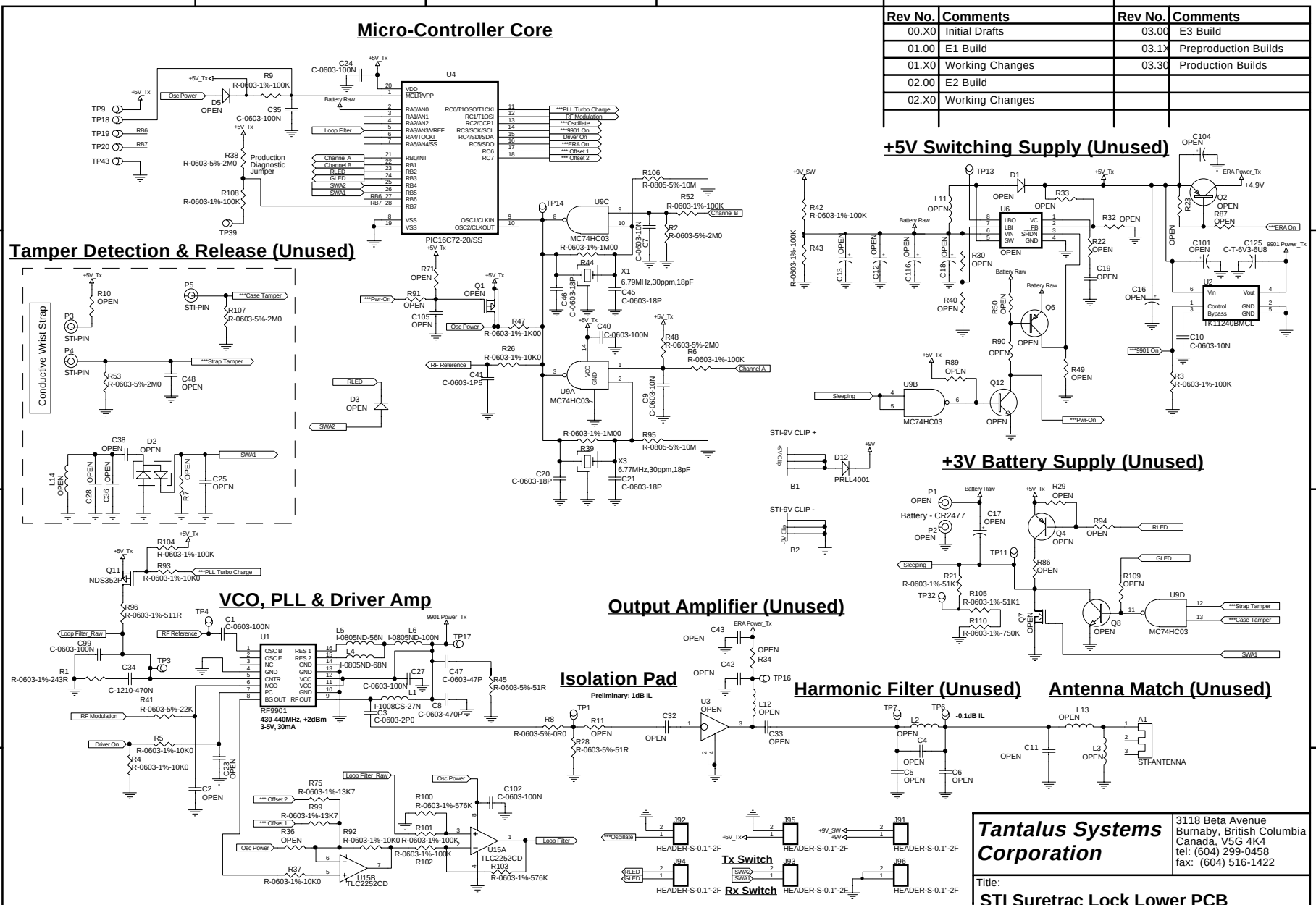

Tantalus Systems Corporation

3118 Beta Avenue
Burnaby, British Columbia
Canada, V5G 4K4
tel: (604) 299-0458
fax: (604) 516-1422

Title: **STI Suretrac Lock Lower PCB**

Doc No.: C:\SHARED\CONTRACT\STI~1\DESIGN\ARTWORK\RE\

Revision: **04.10** | Sheet: **3** of **3** | Printed: **19-Jul-1999**

Released by: Brad Kelly | Date:

(c) Tantalus Systems Corporation. All rights reserved. No part of this publication, or any software included with it may be reproduced, stored in a retrieval system, or transmitted in any form or by any means including photocopying, electronic, mechanical, recording or otherwise without the prior written permission of the copyright holder. This document contains proprietary information of Tantalus Systems Corporation. The contents are confidential and any disclosure to persons other than the officers, employees, agents or subcontractors of the owner or licensee of this document, without the prior written consent of Tantalus Systems Corp. is strictly prohibited.