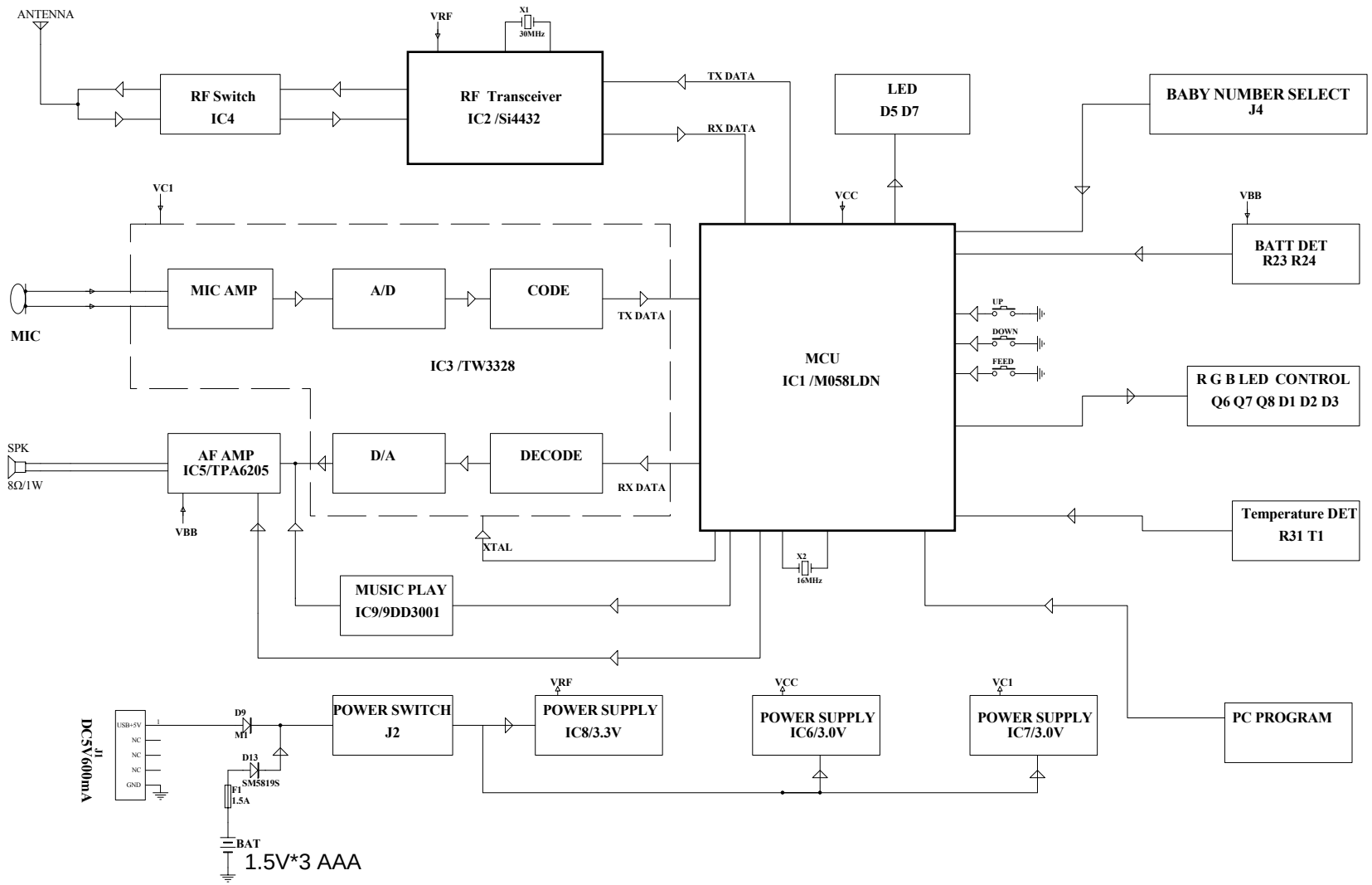BC-70 BLOCK DIAGRAM