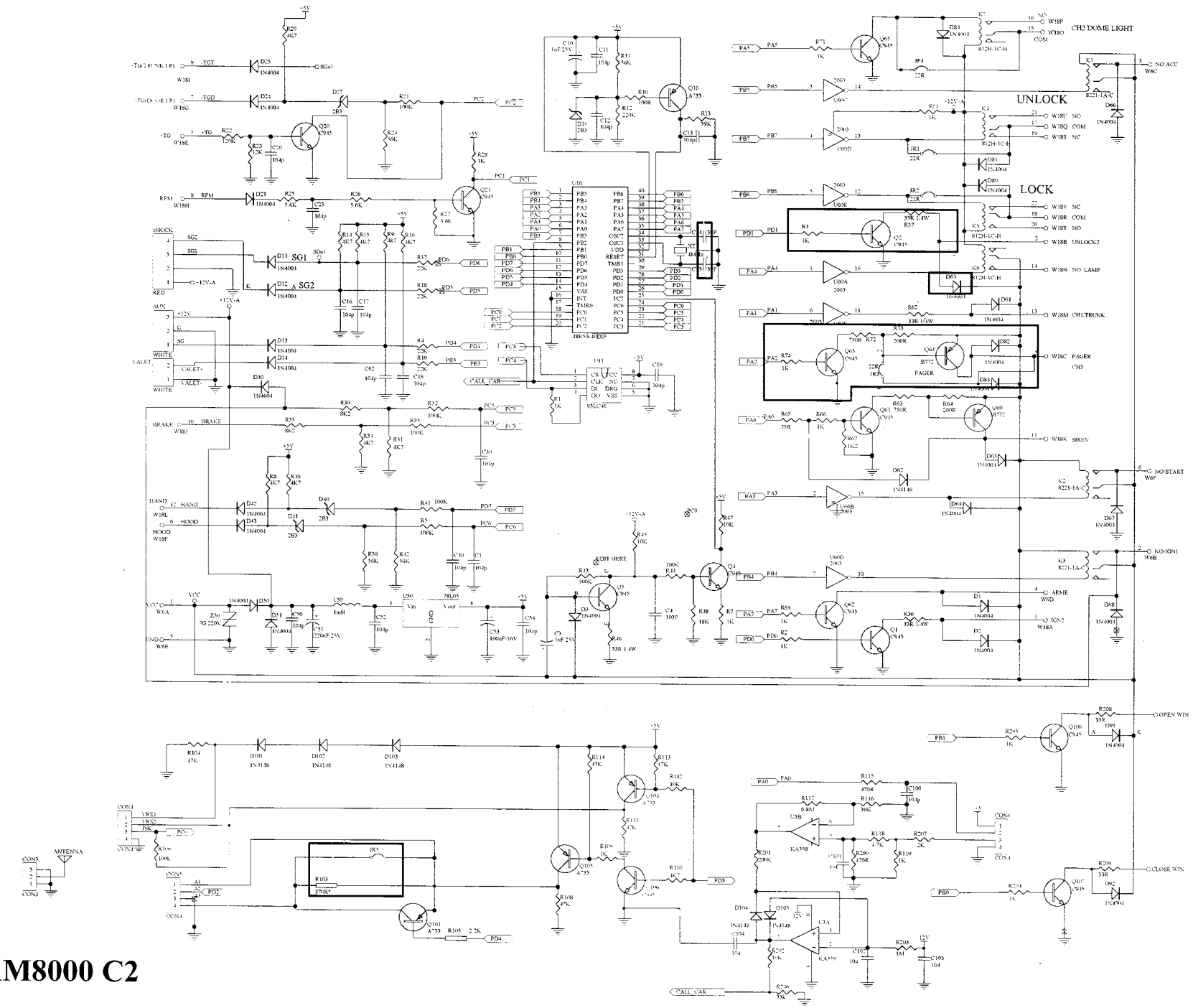

AM8000 C2

Title: Portman Security System International Co., Ltd.

Size: A2 | Number: AM8000 | Revision:

Date: 2-Jun-2001 | Sheet of

File: D:\AUTOCAD\一大全\PCB\AM8000\AM8000.DWG